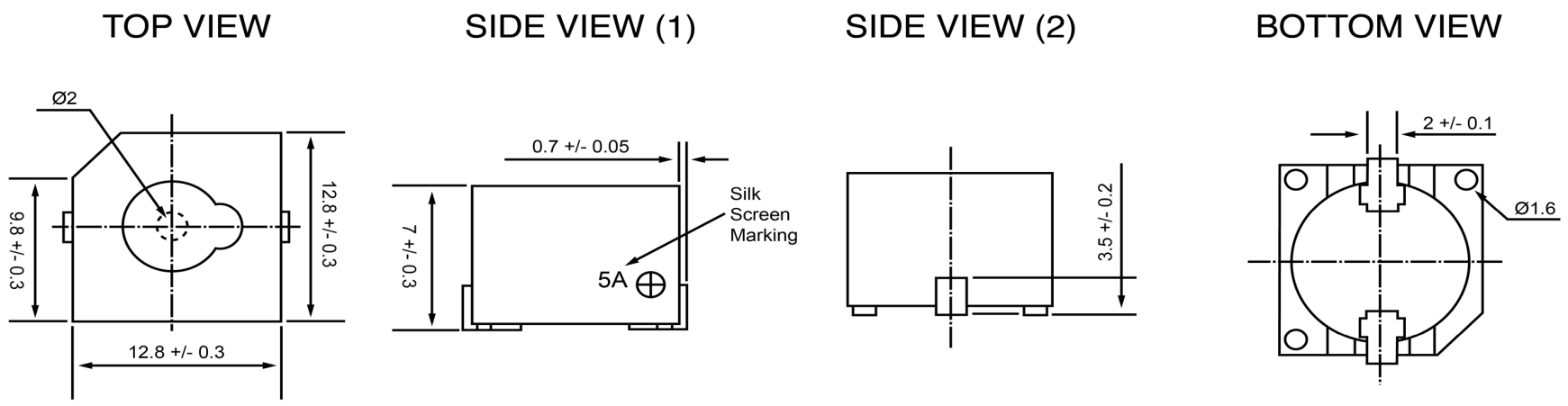

Specifications

Description	Value	Unit
Technology	Electro-Mechanical	
Resonant Frequency	2,400	(Hz)
Rated Voltage	5	(V)
SPL @ 10cm	88	(dBA)
Tone	Single	
Mount Type	Surface Mount	
Voltage Range	4 ~ 7	(V)
Max Rated Current	30	(mA)
Housing Material	PPS	
Operating Temperature	-40 ~ +85	°C
Storage Temperature	-40 ~ +85	°C
Weight	2	(g)

Notes

1) All dimensions are in mm unless otherwise noted
2) All parts meet RoHS

Revision History

Version	Description	Date	Approved
1	Released from Engineering	10/21/2013	J.S

Drawn by	Date	Checked by	Date	Approved by	Date
A.B.	10/21/2013	C.E.	10/21/2013	J.S	10/21/2013

DB UNLIMITED

Electro-Mechanical Indicator

IE122405-1

Additional considerations can be found at www.dbunlimitedco.com/technical-articles.

©2013, DB Unlimited