Mallory Sonalert Products Inc.	Part #	PT-2745FWQ
Sales Outline Drawing	Revision	E

May not be suitable for all medical and aerospace applications.

Specifications: Contact Mallory Sonalert to discuss your application.

Resonant Frequency (Hz)	4000 ± 500
Operating Voltage (Vp-p)	3-28
Rated Voltage (Vp-p)	12
Current Consumption (mA/max)	8.0 at Rated Voltage
Sound Pressure Level (dB/min)	85 at 30cm at Rated voltage
Operating Temperature (°C)	-20 ~ +90
Storage Temperature (°C)	-30 ~ +100
Housing	ABS 777D UL94HB plastic resin (Color: Black)
Lead Wires	28 AWG M = Main (Ceramic); F = Feedback; G = Ground (Metal)
Weight (Grams)	4.6
Options	For other options contact factory

NO CIRCUITRY

Dimensions: (units: mm)

ROHS Compliant

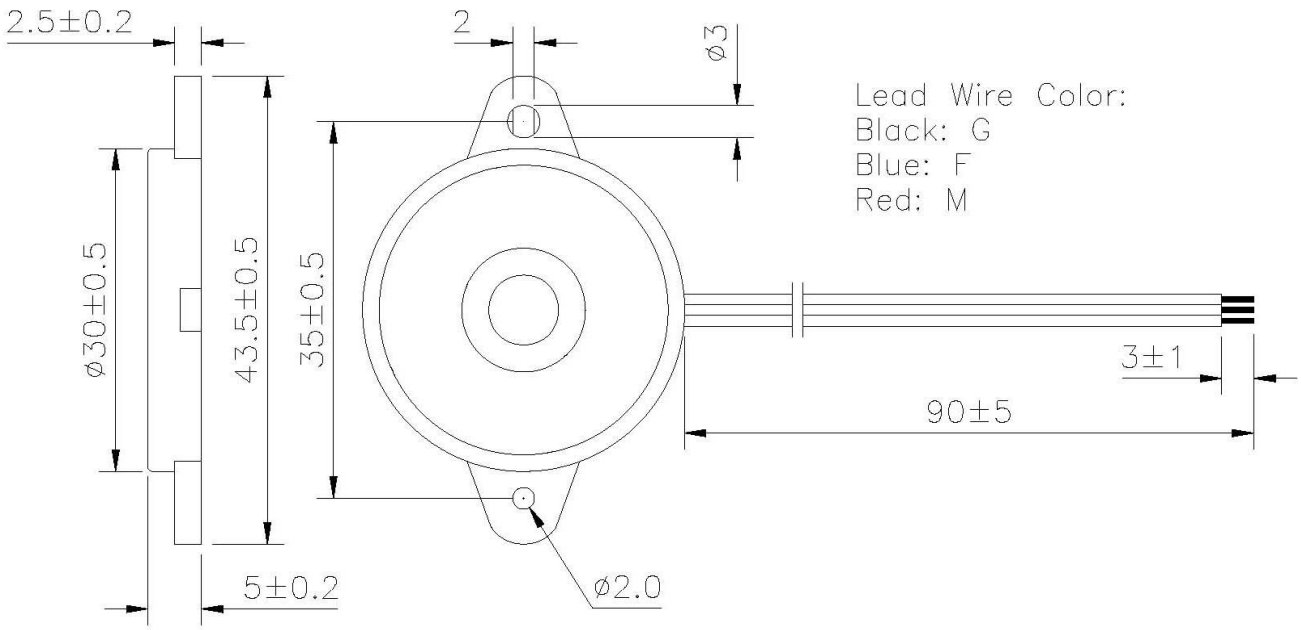

4411 South High School Road, Indianapolis, Indiana 46241 USA ● Phone (317) 612-1000 ● Fax (317) 612-1010 ● http://www.mspindy.com