Alle Rechte vorbehalten/ *All rights reserved*

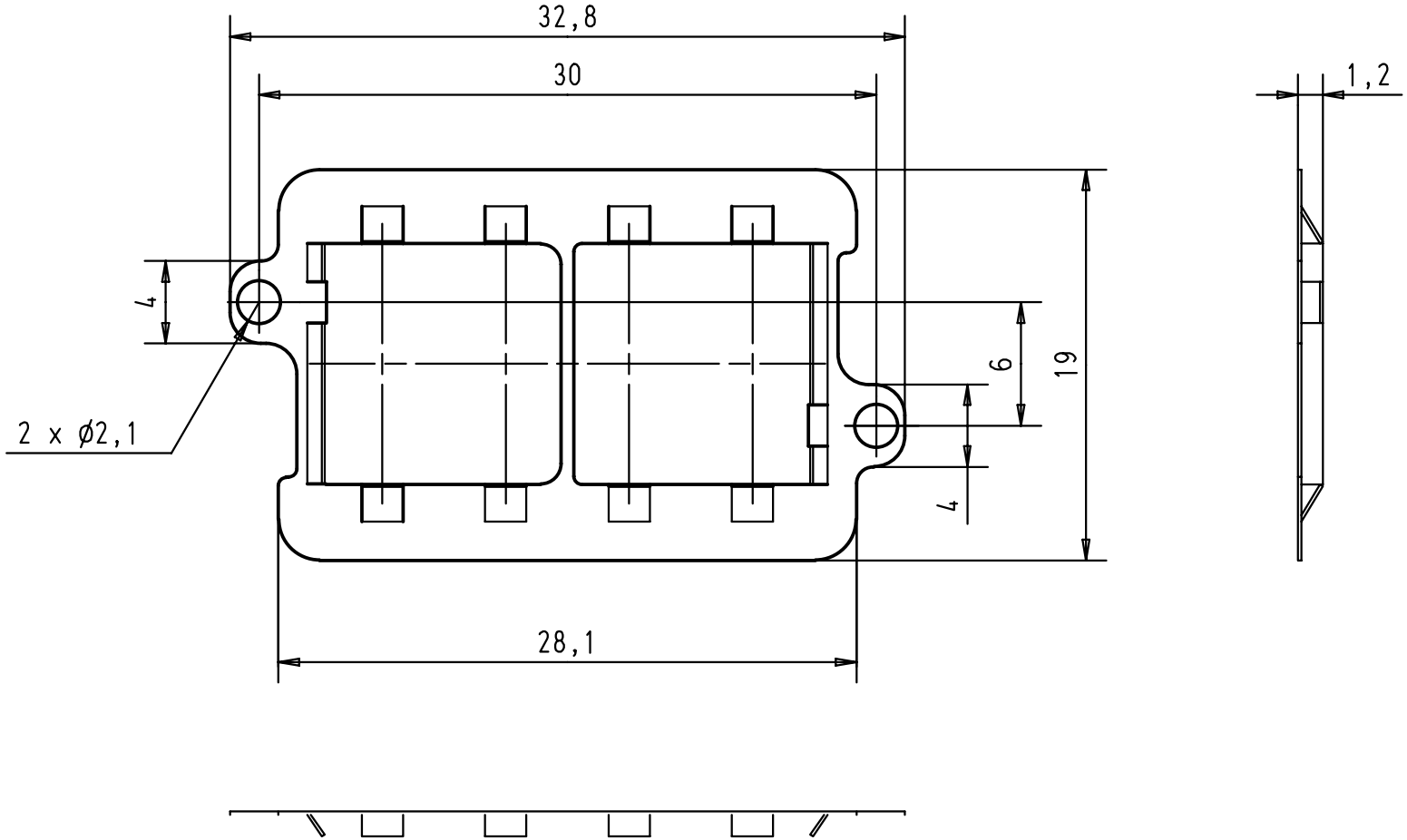


material = nickel silver 0,15 thick

| Mod. | Dat. | Name |
|---|---|---|
| 27947 | 22-SEP-00 | JB |
| 17967 | 10-MAR-97 | JB |
| 14898 | 08-DEC-94 | JB |

| | Dat. | Name |
|---|---|---|
| Detail. | 08-DEC-94 | JB |
| Insp. | | |
| Stand. | | |

All Dim. in mm
Orig. Size DIN A 4

HARTING EURL
F-95972 Paris

*har.link®*
RFI gasket
for rigid panel

TB 27 71 040 0002

Sub.

Maßstab/ *Scale* 3:1

Blatt/ *Page* 1/1