RoHS

THIS IS A RoHS COMPLIANT COMPONENT/ PRODUCT.

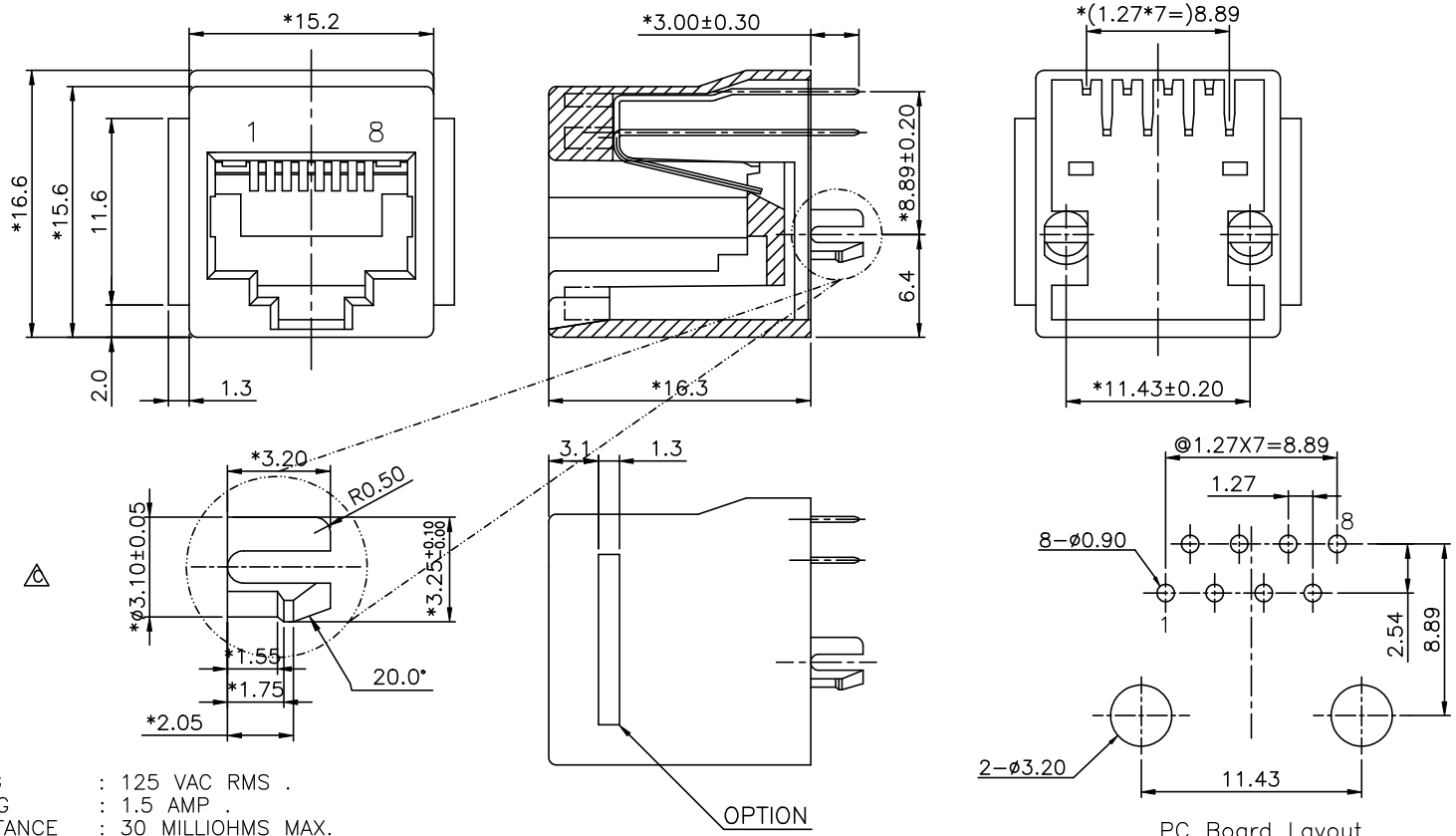

PC Board Layout
Component Side Shown

NOTES:

ELECTRICAL:

1. VOLTAGE RATING : 125 VAC RMS .
2. CURRENT RATING : 1.5 AMP .
3. CONTACT RESISTANCE : 30 MILLIOHMS MAX.
4. INSULATION RESISTANCE : 1000 MEGOHMS MIN. @ 500 VDC.
5. DIELECTRIC STRENGTH : 1000 VAC RMS 60Hz, 1MIN.

MECHANICAL:

1. HOUSING&INS MATERIAL : HIGH TEMP. UL94V-0.

   HOUSING&INS COLOR : BK.
2. CONTACT MATERIAL : PHOSPHOR BRONZ T=0.35mm.
3. PLATING : GOLD PLATING OVER NICKEL.
4. OPERATING LIFE : 750 CYCLES MIN.
5. PCB RETENTION PRE-SOLDER : 1 LB MIN.
6. PCB RETENTION POST-SOLDER : 10 LBS MIN.

ENVIRONMENTAL:

1. STORAGE : -40°C TO +85°C.
2. OPERATION : 0°C TO 70°C.

MATES WITH MODULAR PLUG CONFORMING TO FCC PART 68, SUBPART F.

ORDERING INFORMATION:

PART NUMBER	PRODUCT CODE	CONFIGURATION
325I-0002-0I	RJJU-88-I2I-EIV-009	6U" GOLD PLATING
325I-0002-02	RJJU-88-I4I-EIV-009	30U" GOLD PLATING

c UL us UL RECOGNIZED - FILE #E465899

Frequence	Near-End Cross Talk dB, MIN.	Return Loss dB, MIN.
1.0 MHZ	65.0	23.0
4.0 MHZ	65.0	23.0
8.0 MHZ	62.0	23.0
10.0 MHZ	60.0	23.0
16.0 MHZ	56.0	23.0
20.0 MHZ	54.0	23.0
25.0 MHZ	52.0	14.0
31.25 MHZ	50.0	14.0
62.5 MHZ	44.0	14.0
100.0 MHZ	40.0	14.0

MARK	ECN-NO.	REVISION RECORD	DRAWN	DATE
B		ADD NEW P/N	LINGER	120706
A	X0	0000000 NEW DESIGN	LINGER	100806

encitech

UNLESS OTHERWISE SPECIFIED TOLERANCE			
Dimension Range	Tolerance		
X.X	±0.20	UNIT	mm
X.XX	±0.15		
X.XXX	±0.10	SIZE	A3
ANGLE	±5°		

SCALE 2.5/1 CHECKED APPROVED SHEET 1/1

Material/Plated/Notes: SEE NOTE

NAME: TOP ENTRY PCB JACK Cat.5 TYPE 8P

Tooling No.

PART NO. SEE NOTE REV. H

DOC. NO.

Design drawing