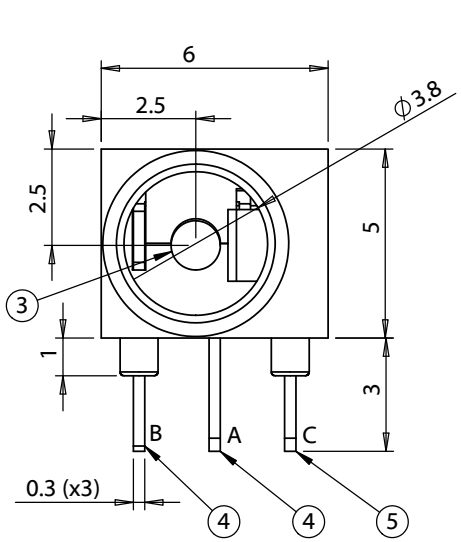

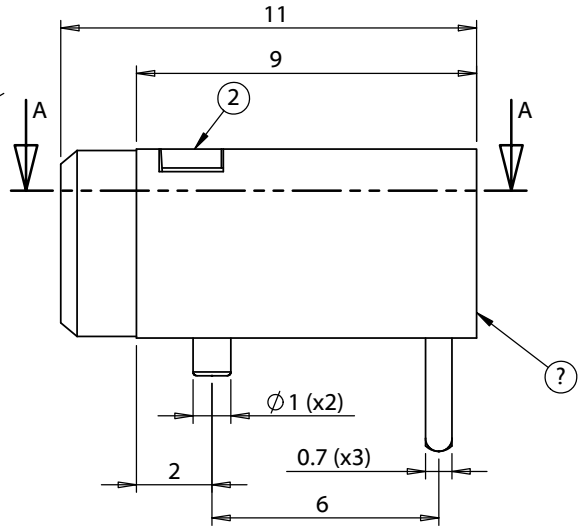

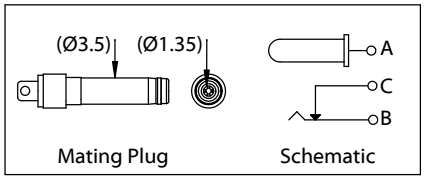

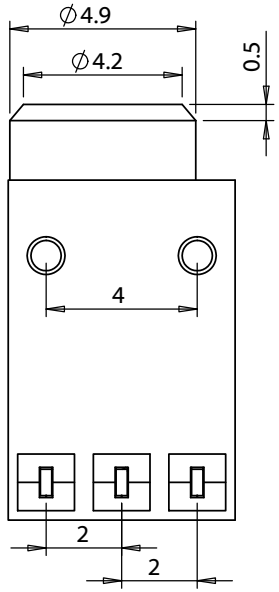

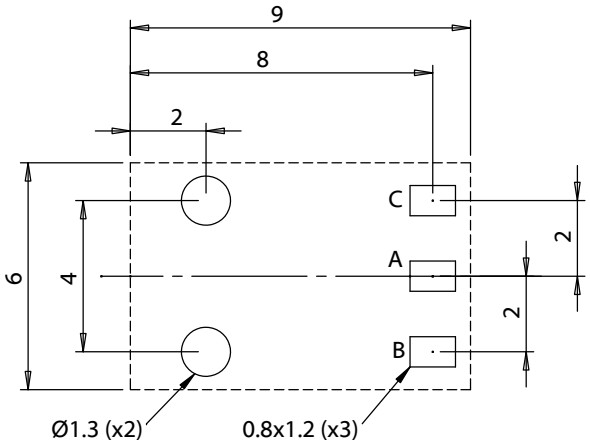

P.C.B Layout

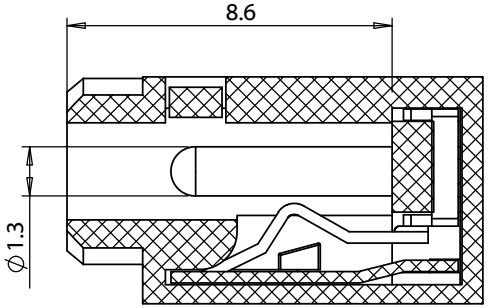

SECTION A-A

Revision:	Date:	Description:
A	9/20/2018	Initial release

Prepared: AW — Digitally signed by AW Date: 2019.08.09 09:19:17 -07'00'

Verified: PS — Digitally signed by PS Date: 2019.08.09 13:30:46 -07'00'

Dimensions are in millimeters.
Tolerances:
< 1.0: ± 0.1 mm
1.0 to 10.0: ± 0.2 mm
> 10.0: ± 0.3 mm

Notes:

Function test: no open, no short circuit, no intermittent

Description:

Connector, dc jack 3.5x1.35 mm, PCB mount, 90°, silver plated, thru hole

TENSILITY

tel 1.541.323.3228 *800* 877.670.7118
fax 1.541.323.4202 *web* tensility.com

Size: A

Part number: 54-00143

Scale: 5:1

Sheet 1 of 2

5 4 3 2 1

Ratings
Maximum operating voltage: 48 V
Maximum operating current: 6.0 A (not mated under load)

Operating Temperature Range
-40 ~ 85 °C, relative humidity of 85% or less

Materials
1 Insulator: Nylon, black
2 Cover: Nylon, black
3 Center Pin: brass, silver plated
4 Terminal: brass, silver plated
5 Spring contact: phosphor bronze, silver plated

Electrical Requirements
Dielectric strength: 1 min @ 500 Vac
Insulation resistance: 100 MΩ @ 500 Vdc minimum
Contact resistance: 50 mΩ maximum

Mechanical Requirements
Insertion force: 0.5-1.0 kgf
Withdrawal force: 0.3-0.8 kgf
Life cycle: 5000 mating cycles while maintaining contact resistance: 100 mΩ maximum, withstand voltage: 500 Vac, 1 min
Terminal strength: 150 gf applied to the terminal for 15 seconds in any direction while maintaining electrical characteristics and without damage or excessive looseness of terminals

Soldering
Solderability: 75% minimum coverage when terminals dipped 2mm in 245 ±5 °C solder bath for 3 ±0.5 seconds
Solder bath durability: no deformation when immersed in 255 ±5 °C up to surface of the board 1.6 mm for 5 seconds or less
Solder iron durability: no deformation when exposed to 350 ±10 °C for 3 ±0.5 seconds

Environmental Requirements
Cold test: -25 ±3 °C for 48 hours without deformation
Heat test: 85 ±2 °C, relative humidity 45-85% for 48 hours without deformation
Humidity test: 40 ±2 °C, relative humidity 90-95% for 48 hours without deformation

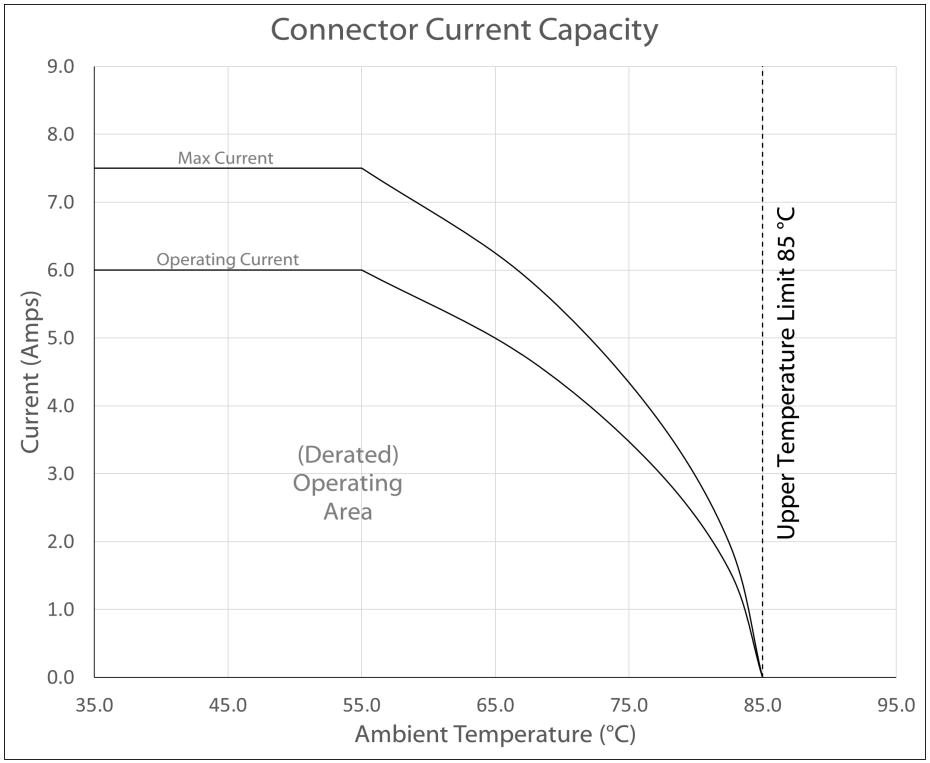

Testing based on IEC 60512-5-2. Max current curve generated with isolated test article under controlled environmental conditions, and does not take into account external factors such as housings,mating cables, or other circuitry. Operating current curve (derated by 20% of maximum values) accounts for external factors, and manufacturing variation.

Wave Soldering Temperature Profile

Pb - Free Flow Profile
Solder temperature: 245 °C
Time: 5 seconds maximum
Pre-heat: 100 ~120°C
Time: 70 seconds maximum
Measure point: surface of the solder leads

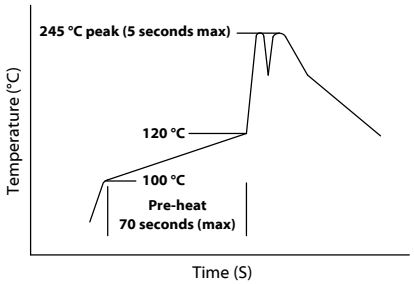

Revision:	Date:	Description:
A	9/20/2018	Initial release

Prepared: AW Digitally signed by AW Date: 2019.08.09 09:19:34 -07'00'

Verified: PS Digitally signed by PS Date: 2019.08.09 13:31:02 -07'00'

Dimensions are in millimeters.
Tolerances:
< 1.0: ± 0.1 mm
1.0 to 10.0: ± 0.2 mm
> 10.0: ± 0.3 mm

Notes:
Function test: no open, no short circuit, no intermittent

Description:
Connector, dc jack 3.5x1.35 mm, PCB mount, 90°, silver plated, thru hole

TENSILITY
tel 1.541.323.3228 800 877.670.7118
fax 1.541.323.4202 web tensility.com

Size: A
Part number: 54-00143
Scale: 5:1
Sheet 2 of 2

5 4 3 2 1