REV.	ECN NO.	DATE	SIGN	DESCRIPTION
B	C191866	2019/10/15	Ouyang	B X5
C	C220487	2022/04/01	Vicky	C X4
D	C230095	2023/02/03	Vicky	D X2

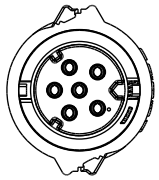

B Conn.2
Female Conn
Female Pin

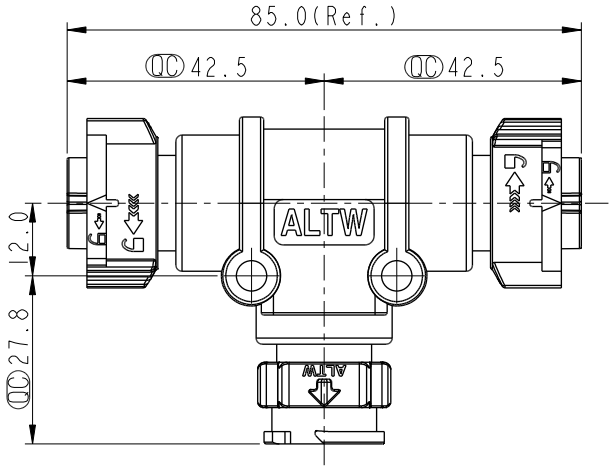

B Conn.1
Male Conn
Male Pin

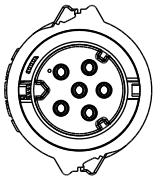

B Conn.3
Female Conn
Female Pin

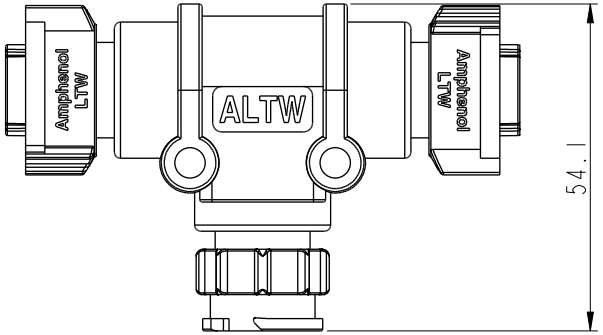

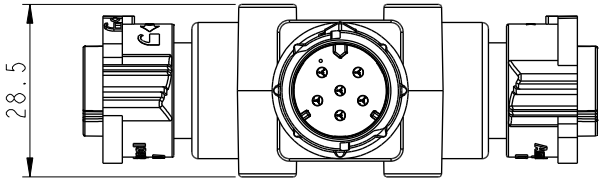

C Note:
* RoHS Compliant
* QC Important dimension
* C1
D Waterproof rate: IP68, mated 1m/24h
Housing: Thermoplastic, Black
Pin: Copper alloy, Gold plated
* C2 & C3
D Waterproof rate: IP68, mated 1m/24h
Housing: Thermoplastic, Black
Pin: Copper alloy, Gold plated
O-Ring: Rubber, Gray
Nut: Thermoplastic, Black
* Wire: UL1007, 16AWG
* Outer Mold: Thermoplastic, Black

UNIT: mm	TITLE: ACC, XLOK, C-10A, T ADA W/O CB MFF (C)	Amphenol LTW 安費諾亮泰企業股份有限公司	ITEM NO	DRAWN BY: Ouyang	DATE: 2019-07-30
TOLERANCE ±0.5mm	SCALE 1:1 / SIZE A4 / SHEET 1 OF 2		DWG NO: AB-CB-XXXXXX-MFF-TQ001	CHECKED BY: Jerry	DATE: 2019-07-30
	REV. D / WC-REV. .0	QC: Inspection item	CUSTOMER: ALTW	APPROVED BY: Fred	DATE: 2019-07-30

THIS DOCUMENT IS SUBJECT TO CHANGE WITHOUT NOTICE. IT IS CONFIDENTIAL AND A PROPERTY OF Amphenol LTW. DISCLOSURE TO THIRD PARTY HAS TO BE AUTHORIZED BY Amphenol LTW.

AB-CB-XXXXXX-MFF-TQ001

B C

XXXXXX: No. Of Pin

B

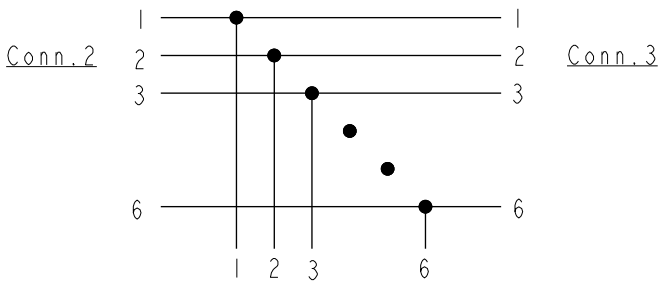

Connection Diagram

	Pin Assignments Front View		
	4PIN	5PIN	6PIN
MALE	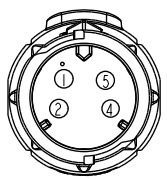	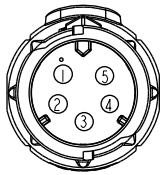	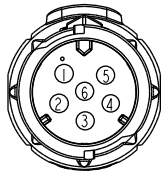
Female	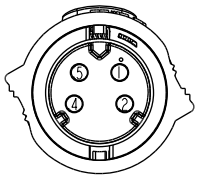	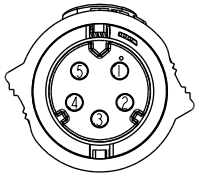	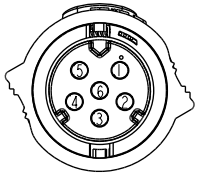
Pin Out	Pin# Color Pin1 Black(黑) Pin2 Brown(棕) Pin4 Orange(橙) Pin5 Yellow(黃)	Pin# Color Pin1 Black(黑) Pin2 Brown(棕) Pin3 Red(紅) Pin4 Orange(橙) Pin5 Yellow(黃)	Pin# Color Pin1 Black(黑) Pin2 Brown(棕) Pin3 Red(紅) Pin4 Orange(橙) Pin5 Yellow(黃) Pin6 Green(綠)

UNIT:mm	TITLE ACC, XLOK, C-10A, T ADA W/O CB MFF C			ITEM NO	DRAWN BY Ouyang	DATE 2019-07-30
TOLERANCE ±0.5mm	SCALE 1:1	SIZE A4	SHEET 2 OF 2	DWG NO AB-CB-XXXXXX-MFF-TQ001	CHECKED BY Jerry	DATE 2019-07-30
	REV. D	WC-REV. .0	QC: Inspection item	CUSTOMER ALTW	APPROVED BY Fred	DATE 2019-07-30

Amphenol LTW

安費諾亮泰企業股份有限公司

THIS DOCUMENT IS SUBJECT TO CHANGE WITHOUT NOTICE. IT IS CONFIDENTIAL AND A PROPERTY OF Amphenol LTW. DISCLOSURE TO THIRD PARTY HAS TO BE AUTHORIZED BY Amphenol LTW.