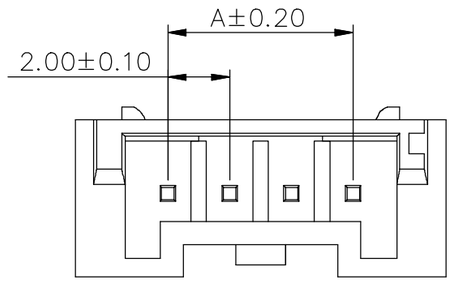

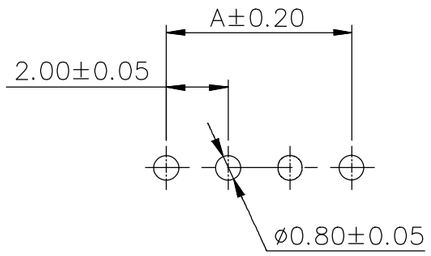

P.C.B LAYOUT

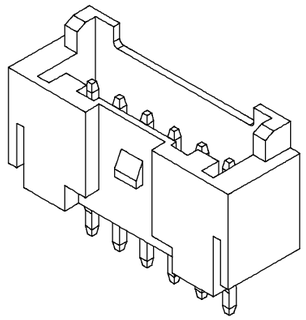

NOTE:

1.MATERIAL
1.1 Insulator:Nylon 6T,UL94V-0,Ivory
1.2 Contact:Brass,Tin over Nickel

2.ELECTRIC
2.1 Voltage Rating:250V AC/DC
2.2 Current Rating:3A AC/DC
2.3 Withstanding Voltage:800V AC/minute
2.4 Insulation Resistance:1000MΩ Min

3.Temperature Range:-40°C To +105°C
4.Packing:PE bag

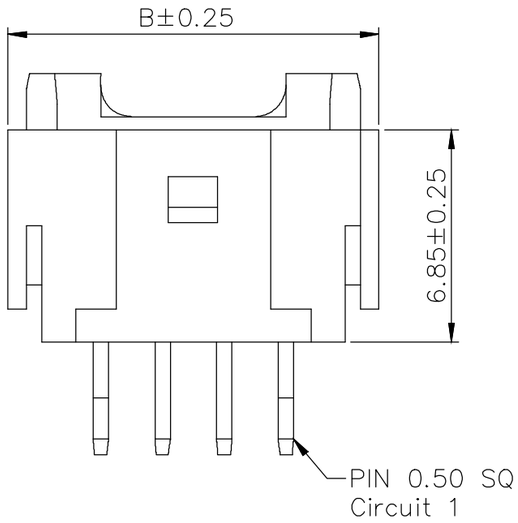

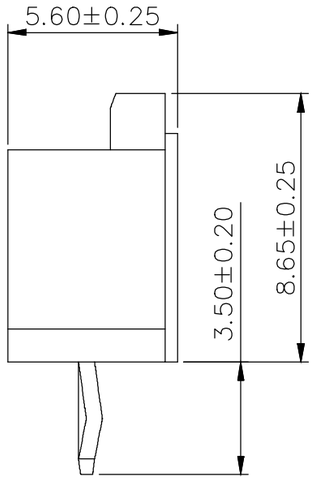

Poles	Part No.	Dimmensions (mm)	
		A	B
02	A-WBP-K015EG-02TB01	2.00	8.00
03	A-WBP-K015EG-03TB01	4.00	10.00
04	A-WBP-K015EG-04TB01	6.00	12.00
05	A-WBP-K015EG-05TB01	8.00	14.00
06	A-WBP-K015EG-06TB01	10.00	16.00
07	A-WBP-K015EG-07TB01	12.00	18.00
08	A-WBP-K015EG-08TB01	14.00	20.00
09	A-WBP-K015EG-09TB01	16.00	22.00
10	A-WBP-K015EG-10TB01	18.00	24.00
11	A-WBP-K015EG-11TB01	20.00	26.00
12	A-WBP-K015EG-12TB01	22.00	28.00
13	A-WBP-K015EG-13TB01	24.00	30.00
14	A-WBP-K015EG-14TB01	26.00	32.00
15	A-WBP-K015EG-15TB01	28.00	34.00
16	A-WBP-K015EG-16TB01	30.00	36.00

RoHS compliant
unit:mm

① File No.: E198287

Scale	Free
TOLERANCE	
X.	±0.35
X.X	±0.25
X.XX	±0.20
X.XXX	±0.15
DIM	TOL
Angle	TOL

Id.	modification	Date	Name
②	Update the dimension	03.19.2025	Peter
①	Add UL E-No. on page 1,2,3,4,6	03.15.2023	Peter
⓪	Drawn	01.10.2022	Peter

	Date	Name
Drawn	01.10.2022	Peter
Approved	03.19.2025	Peter

ASSMANN WSW components

Description: Wire to Board Wafer
Pitch 2.00mm 180° THT

ASSMANN WSW-NO.
A-WBP-K015EG-xxTB01

Drawing-No.
ASS 9187 CO

rev02

Customer-No.

SHEET
1 / 9

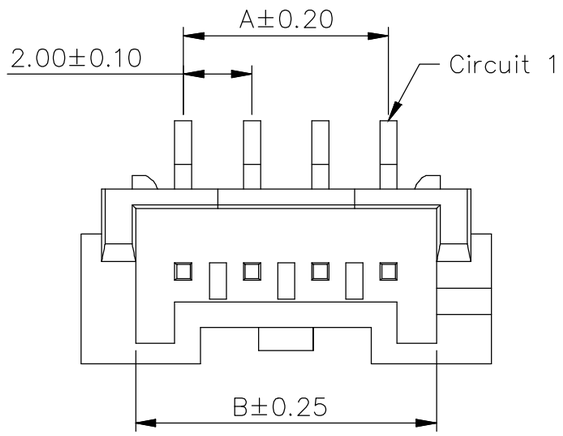

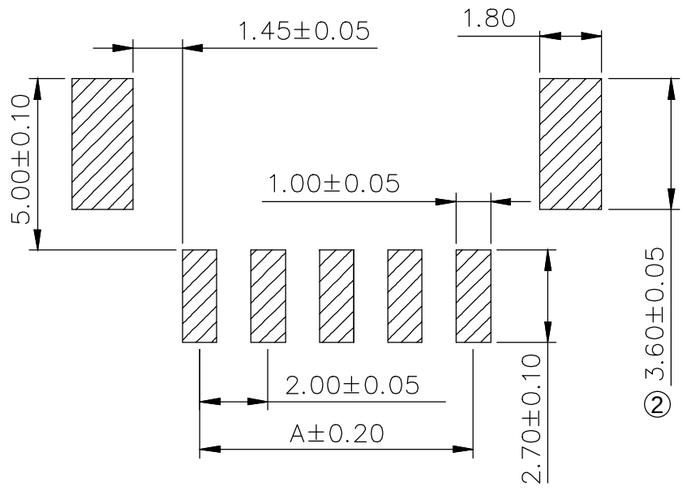

P.C.B LAYOUT

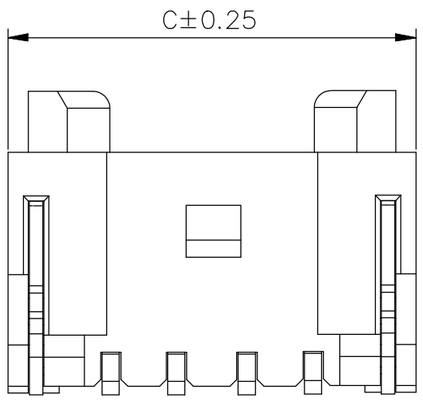

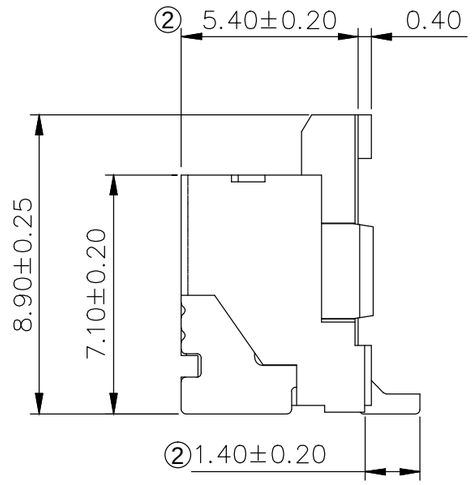

NOTE:

1.MATERIAL
1.1 Insulator:Nylon 6T,UL94V-0,Ivory
1.2 Contact:Brass,Tin over Nickel

2.ELECTRIC
2.1 Voltage Rating:250V AC/DC
2.2 Current Rating:3A AC/DC
2.3 Withstanding Voltage:800V AC/minute
2.4 Insulation Resistance:1000MΩ Min

3.Temperature Range:-40°C To +105°C
4.Packing:Reel

Poles	Part No.	Dimmensions (mm)		
		A	B	C
02	A-WBP-K015EG-02SR01	2.00	4.50	8.00
03	A-WBP-K015EG-03SR01	4.00	6.50	10.00
04	A-WBP-K015EG-04SR01	6.00	8.50	12.00
05	A-WBP-K015EG-05SR01	8.00	10.50	14.00
06	A-WBP-K015EG-06SR01	10.00	12.50	16.00
07	A-WBP-K015EG-07SR01	12.00	14.50	18.00
08	A-WBP-K015EG-08SR01	14.00	16.50	20.00
09	A-WBP-K015EG-09SR01	16.00	18.50	22.00
10	A-WBP-K015EG-10SR01	18.00	20.50	24.00
11	A-WBP-K015EG-11SR01	20.00	22.50	26.00
12	A-WBP-K015EG-12SR01	22.00	24.50	28.00
13	A-WBP-K015EG-13SR01	24.00	26.50	30.00
14	A-WBP-K015EG-14SR01	26.00	28.50	32.00
15	A-WBP-K015EG-15SR01	28.00	30.50	34.00
16	A-WBP-K015EG-16SR01	30.00	32.50	36.00

RoHS compliant

unit:mm

① File No.: E198287

Scale	Free
TOLERANCE	
X.	±0.35
X.X	±0.25
X.XX	±0.20
X.XXX	±0.15
DIM	TOL
Angle	TOL

Id.	modification	Date	Name
②	Update the dimension	03.19.2025	Peter
①	Add UL E-No. on page 1,2,3,4,6	03.15.2023	Peter
⓪	Drawn	01.10.2022	Peter

	Date	Name
Drawn	01.10.2022	Peter
Approved	03.19.2025	Peter

Description: Wire to Board Wafer
Pitch 2.00mm 180° SMT

ASSMANN WSW-NO.
A-WBP-K015EG-xxSR01

ASSMANN WSW components

Drawing-No.
ASS 9187 CO

rev02

Customer-No.

SHEET
2 / 9

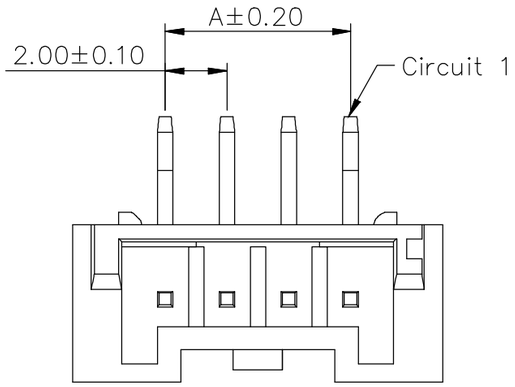

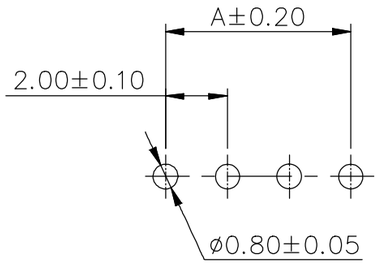

P.C.B LAYOUT

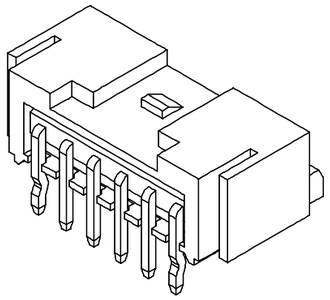

NOTE:

1.MATERIAL
1.1 Insulator:Nylon 6T,UL94V-0,Ivory
1.2 Contact:Brass,Tin over Nickel

2.ELECTRIC
2.1 Voltage Rating:250V AC/DC
2.2 Current Rating:3A AC/DC
2.3 Withstanding Voltage:800V AC/minute
2.4 Insulation Resistance:1000MΩ Min

3.Temperature Range:-40°C To +105°C
4.Packing:PE bag

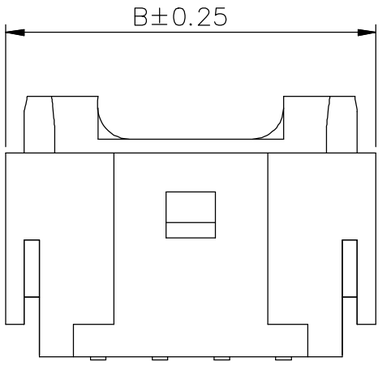

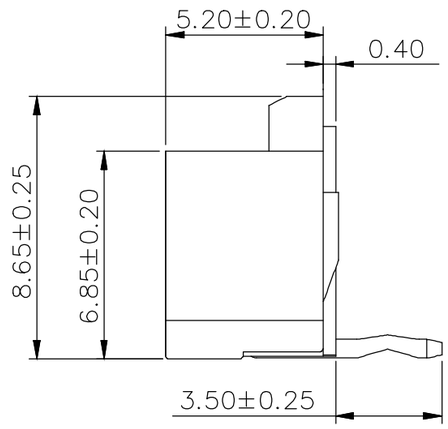

Poles	Part No.	Dimmensions (mm)	
		A	B
02	A-WBP-K015EA-02TB01	2.00	8.00
03	A-WBP-K015EA-03TB01	4.00	10.00
04	A-WBP-K015EA-04TB01	6.00	12.00
05	A-WBP-K015EA-05TB01	8.00	14.00
06	A-WBP-K015EA-06TB01	10.00	16.00
07	A-WBP-K015EA-07TB01	12.00	18.00
08	A-WBP-K015EA-08TB01	14.00	20.00
09	A-WBP-K015EA-09TB01	16.00	22.00
10	A-WBP-K015EA-10TB01	18.00	24.00
11	A-WBP-K015EA-11TB01	20.00	26.00
12	A-WBP-K015EA-12TB01	22.00	28.00
13	A-WBP-K015EA-13TB01	24.00	30.00
14	A-WBP-K015EA-14TB01	26.00	32.00
15	A-WBP-K015EA-15TB01	28.00	34.00
16	A-WBP-K015EA-16TB01	30.00	36.00

RoHS compliant

unit:mm

① File No.: E198287

Scale	Free
TOLERANCE	
X.	±0.35
X.X	±0.25
X.XX	±0.20
X.XXX	±0.15
DIM	TOL
Angle	TOL

Id.	modification	Date	Name
②	Update the dimension	03.19.2025	Peter
①	Add UL E-No. on page 1,2,3,4,6	03.15.2023	Peter
⓪	Drawn	01.10.2022	Peter

	Date	Name
Drawn	01.10.2022	Peter
Approved	03.19.2025	Peter

ASSMANN WSW components

Description: Wire to Board Wafer
Pitch 2.00mm 90° THT

ASSMANN WSW-NO.
A-WBP-K015EA-xxTB01

Drawing-No.
ASS 9187 CO

rev02

Customer-No.

SHEET
3 / 9

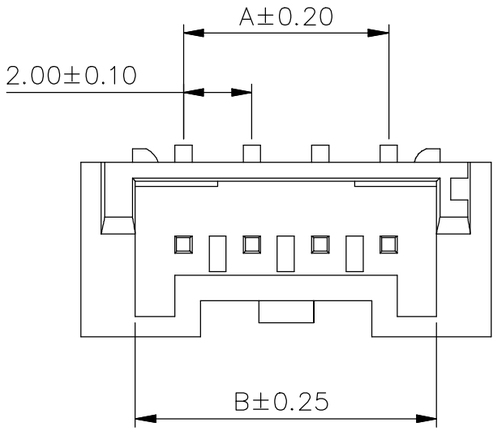

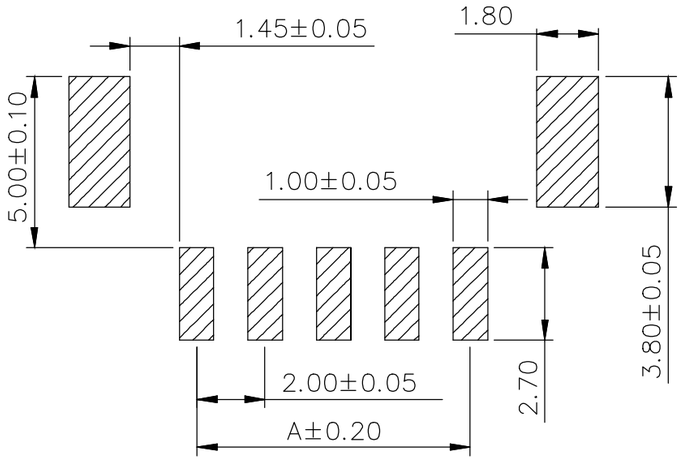

P.C.B LAYOUT

NOTE:

1.MATERIAL
1.1 Insulator:Nylon 6T,UL94V-0,Ivory
1.2 Contact:Brass,Tin over Nickel

2.ELECTRIC
2.1 Voltage Rating:250V AC/DC
2.2 Current Rating:3A AC/DC
2.3 Withstanding Voltage:800V AC/minute
2.4 Insulation Resistance:1000MΩ Min

3.Temperature Range:-40°C To +105°C
4.Packing:Reel

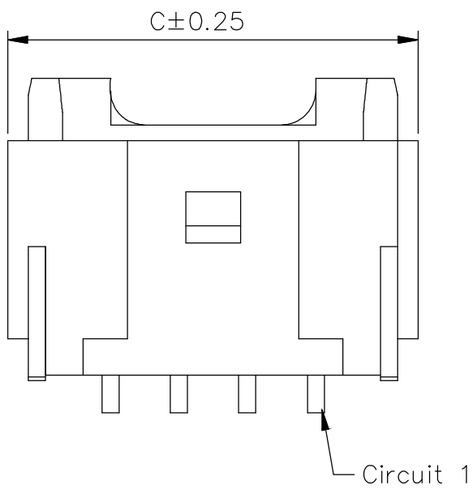

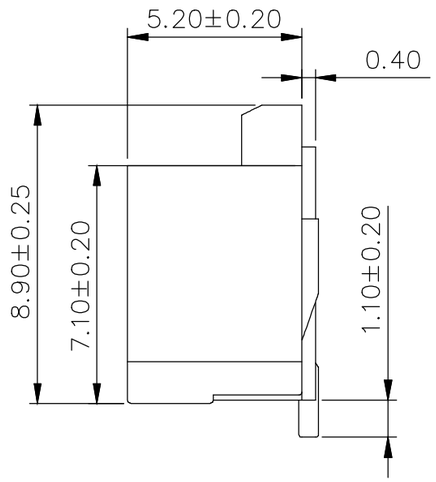

Poles	Part No.	Dimmensions (mm)		
		A	B	C
02	A-WBP-K015EA-02SR01	2.00	4.50	8.00
03	A-WBP-K015EA-03SR01	4.00	6.50	10.00
04	A-WBP-K015EA-04SR01	6.00	8.50	12.00
05	A-WBP-K015EA-05SR01	8.00	10.50	14.00
06	A-WBP-K015EA-06SR01	10.00	12.50	16.00
07	A-WBP-K015EA-07SR01	12.00	14.50	18.00
08	A-WBP-K015EA-08SR01	14.00	16.50	20.00
09	A-WBP-K015EA-09SR01	16.00	18.50	22.00
10	A-WBP-K015EA-10SR01	18.00	20.50	24.00
11	A-WBP-K015EA-11SR01	20.00	22.50	26.00
12	A-WBP-K015EA-12SR01	22.00	24.50	28.00
13	A-WBP-K015EA-13SR01	24.00	26.50	30.00
14	A-WBP-K015EA-14SR01	26.00	28.50	32.00
15	A-WBP-K015EA-15SR01	28.00	30.50	34.00
16	A-WBP-K015EA-16SR01	30.00	32.50	36.00

RoHS compliant

unit:mm

① File No.: E198287

Scale	Free
TOLERANCE	
X.	±0.35
X.X	±0.25
X.XX	±0.20
X.XXX	±0.15
DIM	TOL
Angle	TOL

Id.	modification	Date	Name
②	Update the dimension	03.19.2025	Peter
①	Add UL E-No. on page 1,2,3,4,6	03.15.2023	Peter
⓪	Drawn	01.10.2022	Peter

	Date	Name
Drawn	01.10.2022	Peter
Approved	03.19.2025	Peter

Description: Wire to Board Wafer
Pitch 2.00mm 90° SMT

ASSMANN WSW-NO.
A-WBP-K015EA-xxSR01

Drawing-No.
ASS 9187 CO

rev02

Customer-No.

SHEET
4 / 9

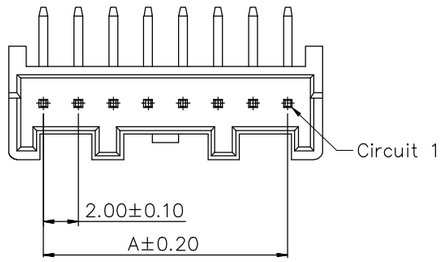

2P~9P

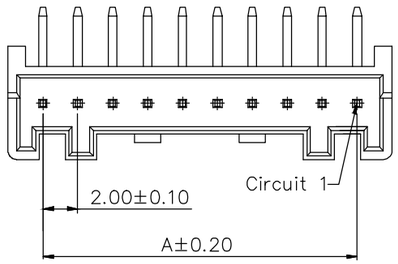

10P~15P

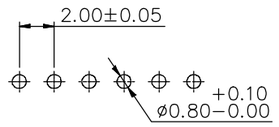

P.C.B LAYOUT

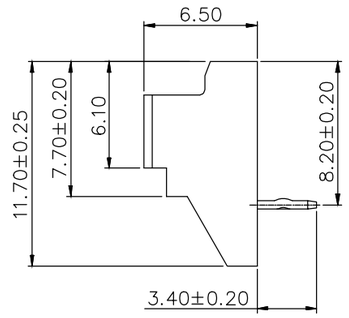

NOTE:

1.MATERIAL
1.1 Insulator:Nylon 66,UL94V-0,White
1.2 Contact:Brass,Tin over Nickel

2.ELECTRIC
2.1 Voltage Rating:250V AC/DC
2.2 Current Rating:3A AC/DC
2.3 Withstanding Voltage:800V AC/minute
2.4 Insulation Resistance:1000MΩ Min

3.Temperature Range:-40°C To +105°C
4.Packing:PE bag

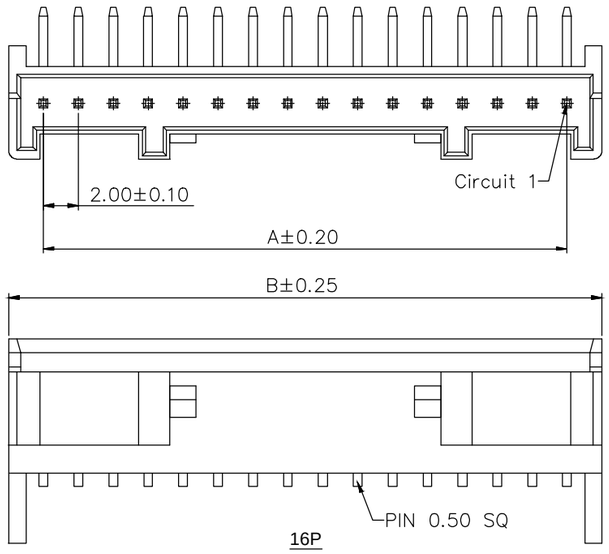

16P

Poles	Part No.	Dimmensions (mm)	
		A	B
02	A-WBP-K015EA-02TB02	2.00	6.00
03	A-WBP-K015EA-03TB02	4.00	8.00
04	A-WBP-K015EA-04TB02	6.00	10.00
05	A-WBP-K015EA-05TB02	8.00	12.00
06	A-WBP-K015EA-06TB02	10.00	14.00
07	A-WBP-K015EA-07TB02	12.00	16.00
08	A-WBP-K015EA-08TB02	14.00	18.00
09	A-WBP-K015EA-09TB02	16.00	20.00
10	A-WBP-K015EA-10TB02	18.00	22.00
11	A-WBP-K015EA-11TB02	20.00	24.00
12	A-WBP-K015EA-12TB02	22.00	26.00
13	A-WBP-K015EA-13TB02	24.00	28.00
14	A-WBP-K015EA-14TB02	26.00	30.00
15	A-WBP-K015EA-15TB02	28.00	32.00
16	A-WBP-K015EA-16TB02	30.00	34.00

RoHS compliant
unit:mm

Scale	Free
TOLERANCE	
X.	±0.35
X.X	±0.25
X.XX	±0.20
X.XXX	±0.15
DIM	TOL
Angle	TOL

Id.	modification	Date	Name
②	Update the dimension	03.19.2025	Peter
⓪	Drawn	01.10.2022	Peter

	Date	Name
Drawn	01.10.2022	Peter
Approved	03.19.2025	Peter

ASSMANN WSW components

Description: Wire to Board Wafer
Pitch 2.00mm 90° THT

ASSMANN WSW-NO.
A-WBP-K015EA-xxTB02

Drawing-No.
ASS 9187 CO

rev02

Customer-No.

SHEET
5 / 9

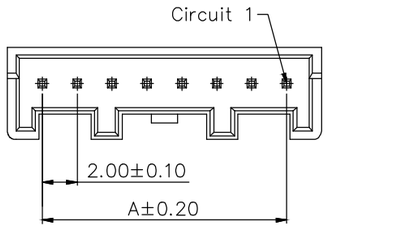

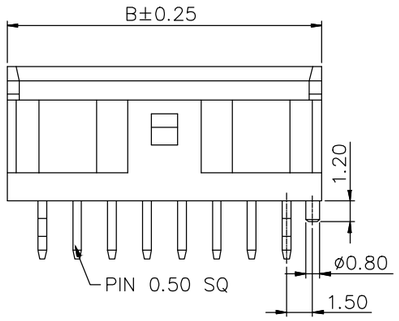

2P~9P

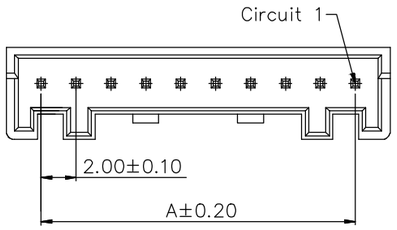

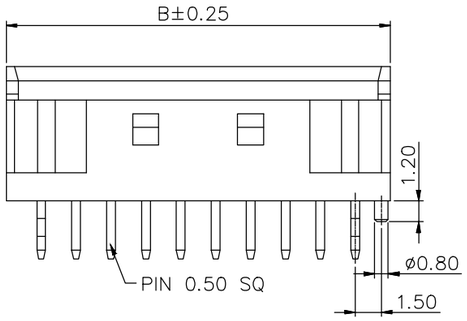

10P~15P

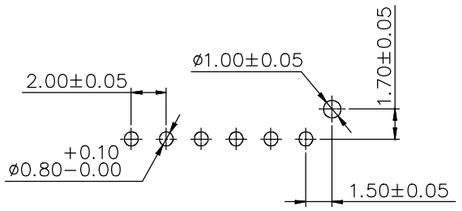

P.C.B LAYOUT

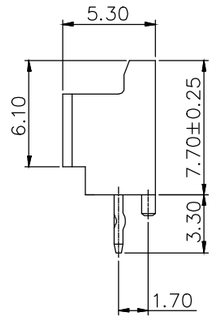

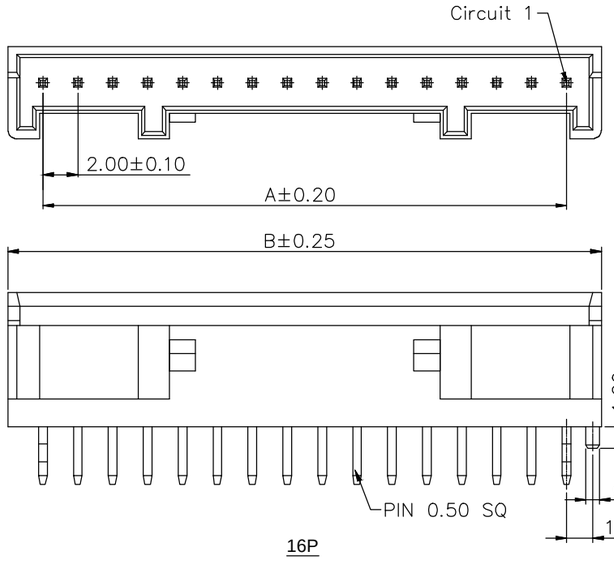

16P

NOTE:

1.MATERIAL
- 1.1 Insulator:Nylon 66,UL94V-0,White
- 1.2 Contact:Brass,Tin over Nickel

2.ELECTRIC
- 2.1 Voltage Rating:250V AC/DC
- 2.2 Current Rating:3A AC/DC
- 2.3 Withstanding Voltage:800V AC/minute
- 2.4 Insulation Resistance:1000MΩ Min

3.Temperature Range:-40°C To +105°C
4.Packing:PE bag

Poles	Part No.	Dimmensions (mm)	
		A	B
02	A-WBP-K015EG-02TB03	2.00	6.00
03	A-WBP-K015EG-03TB03	4.00	8.00
04	A-WBP-K015EG-04TB03	6.00	10.00
05	A-WBP-K015EG-05TB03	8.00	12.00
06	A-WBP-K015EG-06TB03	10.00	14.00
07	A-WBP-K015EG-07TB03	12.00	16.00
08	A-WBP-K015EG-08TB03	14.00	18.00
09	A-WBP-K015EG-09TB03	16.00	20.00
10	A-WBP-K015EG-10TB03	18.00	22.00
11	A-WBP-K015EG-11TB03	20.00	24.00
12	A-WBP-K015EG-12TB03	22.00	26.00
13	A-WBP-K015EG-13TB03	24.00	28.00
14	A-WBP-K015EG-14TB03	26.00	30.00
15	A-WBP-K015EG-15TB03	28.00	32.00
16	A-WBP-K015EG-16TB03	30.00	34.00

RoHS compliant

unit:mm

① File No.: E198287

Scale	Free
TOLERANCE	
X.	±0.35
X.X	±0.25
X.XX	±0.20
X.XXX	±0.15
DIM	TOL
Angle	TOL

Id.	modification	Date	Name
②	Update the dimension	03.19.2025	Peter
①	Add UL E-No. on page 1,2,3,4,6	03.15.2023	Peter
⓪	Drawn	01.10.2022	Peter

	Date	Name
Drawn	01.10.2022	Peter
Approved	03.19.2025	Peter

ASSMANN WSW components

Description: Wire to Board Wafer Pitch 2.00mm 180° THT

ASSMANN WSW-NO.

A-WBP-K015EG-xxTB03

Drawing-No.

ASS 9187CO

rev02

Customer-No.

SHEET 6 / 9

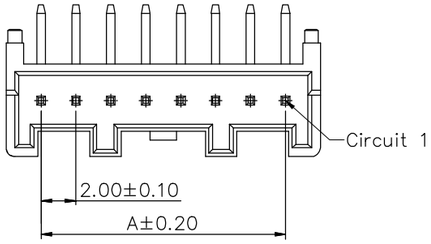

2P~9P

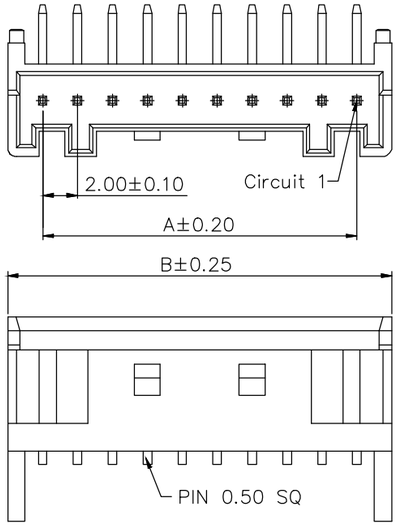

10P~15P

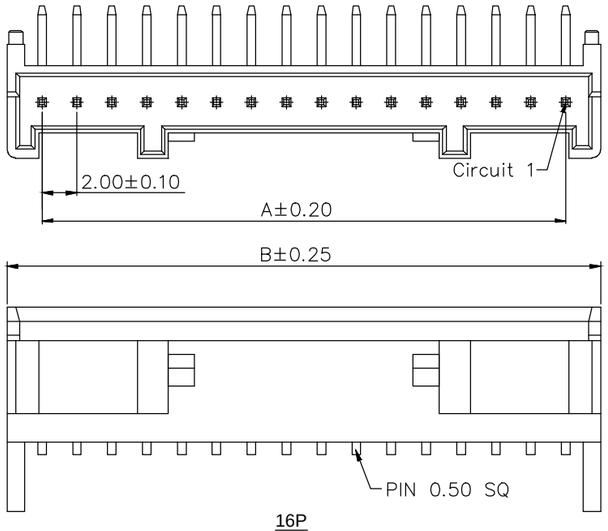

16P

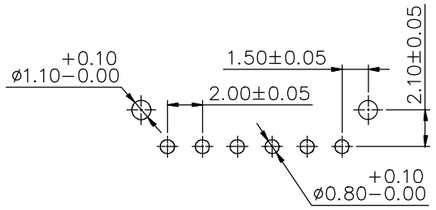

P.C.B LAYOUT

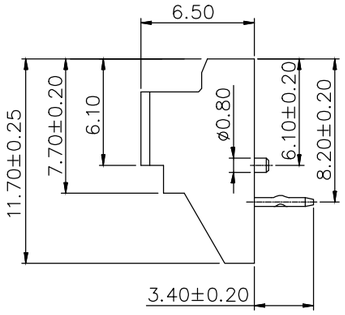

NOTE:

1.MATERIAL
1.1 Insulator:Nylon 66,UL94V-0,White
1.2 Contact:Brass,Tin over Nickel

2.ELECTRIC
2.1 Voltage Rating:250V AC/DC
2.2 Current Rating:3A AC/DC
2.3 Withstanding Voltage:800V AC/minute
2.4 Insulation Resistance:1000MΩ Min

3.Temperature Range:-40°C To +105°C
4.Packing:PE bag

Poles	Part No.	Dimmensions (mm)	
		A	B
02	A-WBP-K015EA-02TB03	2.00	6.00
03	A-WBP-K015EA-03TB03	4.00	8.00
04	A-WBP-K015EA-04TB03	6.00	10.00
05	A-WBP-K015EA-05TB03	8.00	12.00
06	A-WBP-K015EA-06TB03	10.00	14.00
07	A-WBP-K015EA-07TB03	12.00	16.00
08	A-WBP-K015EA-08TB03	14.00	18.00
09	A-WBP-K015EA-09TB03	16.00	20.00
10	A-WBP-K015EA-10TB03	18.00	22.00
11	A-WBP-K015EA-11TB03	20.00	24.00
12	A-WBP-K015EA-12TB03	22.00	26.00
13	A-WBP-K015EA-13TB03	24.00	28.00
14	A-WBP-K015EA-14TB03	26.00	30.00
15	A-WBP-K015EA-15TB03	28.00	32.00
16	A-WBP-K015EA-16TB03	30.00	34.00

RoHS compliant

unit:mm

Scale	Free
TOLERANCE	
X.	±0.35
X.X	±0.25
X.XX	±0.20
X.XXX	±0.15
DIM	TOL
Angle	TOL

Id.	modification	Date	Name
②	Update the dimension	03.19.2025	Peter
①	Add UL E-No. on page 1,2,3,4,6	03.15.2023	Peter
⓪	Drawn	01.10.2022	Peter

	Date	Name
Drawn	01.10.2022	Peter
Approved	03.19.2025	Peter

ASSMANN WSW components

Description: Wire to Board Wafer
Pitch 2.00mm 90° THT

ASSMANN WSW-NO.
A-WBP-K015EA-xxTB03

Drawing-No.
ASS 9187 CO

rev02

Customer-No.

SHEET
7 / 9

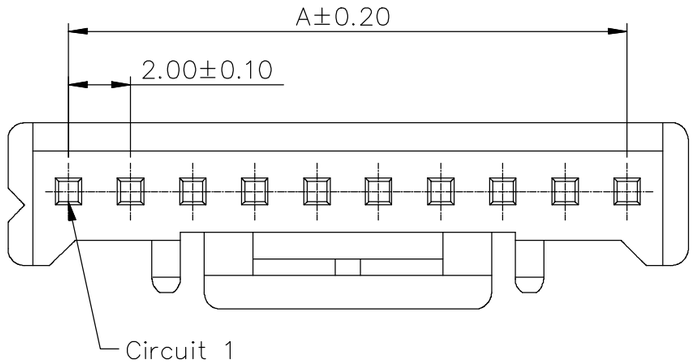

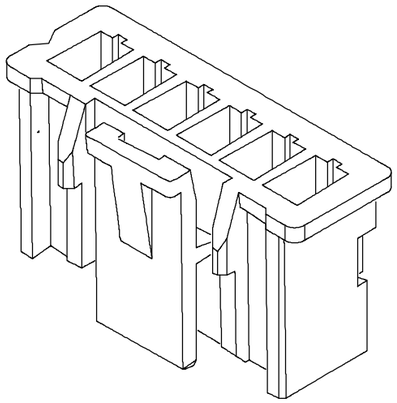

NOTE:

1.MATERIAL
1.1 Insulator:Nylon 66,UL94V-0,White

2.ELECTRIC
2.1 Voltage Rating:250V AC/DC
2.2 Current Rating:3A AC/DC
2.3 Withstanding Voltage:800V AC/minute
2.4 Insulation Resistance:1000MΩ Min

3.Temperature Range:-40°C To +105°C
4.Packing:PE bag

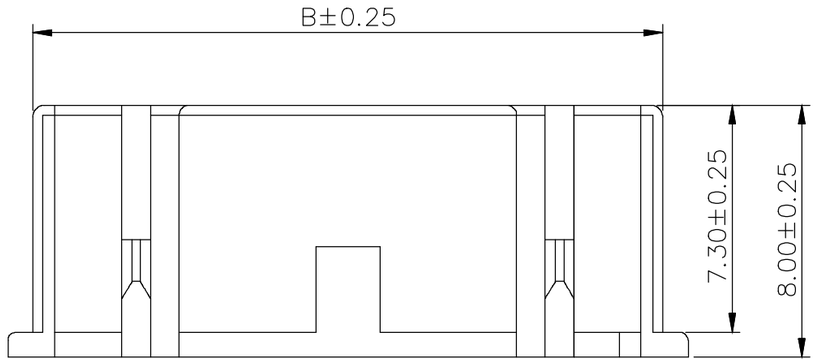

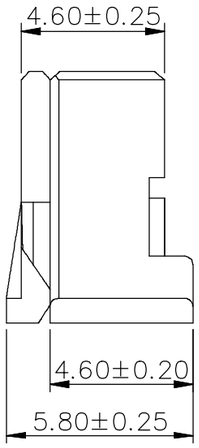

Poles	Part No.	Dimmensions (mm)	
		A	B
02	A-WBH-K015EG-02CB01	2.00	4.30
03	A-WBH-K015EG-03CB01	4.00	6.30
04	A-WBH-K015EG-04CB01	6.00	8.30
05	A-WBH-K015EG-05CB01	8.00	10.30
06	A-WBH-K015EG-06CB01	10.00	12.30
07	A-WBH-K015EG-07CB01	12.00	14.30
08	A-WBH-K015EG-08CB01	14.00	16.30
09	A-WBH-K015EG-09CB01	16.00	18.30
10	A-WBH-K015EG-10CB01	18.00	20.30
11	A-WBH-K015EG-11CB01	20.00	22.30
12	A-WBH-K015EG-12CB01	22.00	24.30
13	A-WBH-K015EG-13CB01	24.00	26.30
14	A-WBH-K015EG-14CB01	26.00	28.30
15	A-WBH-K015EG-15CB01	28.00	30.30
16	A-WBH-K015EG-16CB01	30.00	32.30

RoHS compliant
unit:mm

Scale	Free
TOLERANCE	
X.	±0.35
X.X	±0.25
X.XX	±0.20
X.XXX	±0.15
DIM	TOL
Angle	TOL

Id.	modification	Date	Name
②	Update the dimension	03.19.2025	Peter
①	Add UL E-No. on page 1,2,3,4,6	03.15.2023	Peter
⓪	Drawn	01.10.2022	Peter

	Date	Name
Drawn	01.10.2022	Peter
Approved	03.19.2025	Peter

ASSMANN WSW components

Description: Wire to Board Housing
Pitch 2.00mm

ASSMANN WSW-NO.
A-WBH-K015EG-xxCB01

Drawing-No.
ASS 9187 CO

rev02

Customer-No.

SHEET
8 / 9

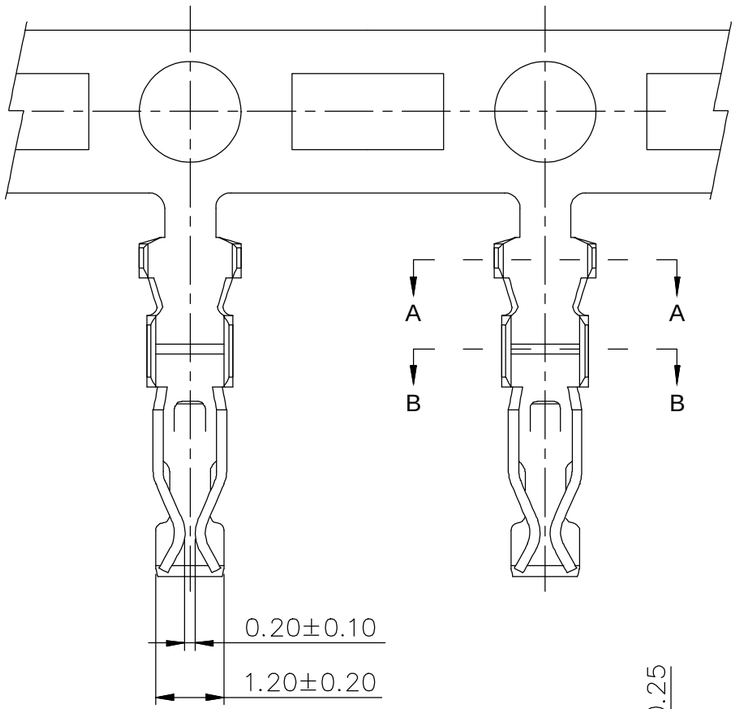

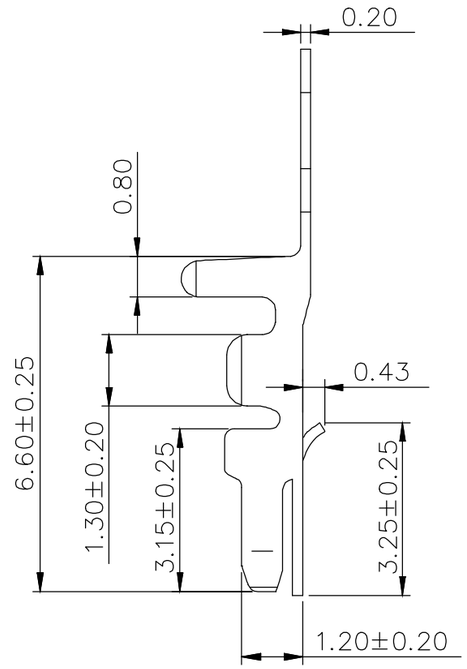

NOTE:

1.MATERIAL
1.1 Contact:Phosphor Bronze,Tin over Nickel

2.ELECTRIC
2.1 Voltage Rating:250V AC/DC
2.2 Current Rating:3A AC/DC
2.3 Withstanding Voltage:800V AC/minute
2.4 Insulation Resistance:1000MΩ Min
2.5 Contact Resistance:10mΩ Max

3.Temperature Range:-40°C To +105°C
4.Applicable Wire:AWG#22-#28
5.Packing:Reel

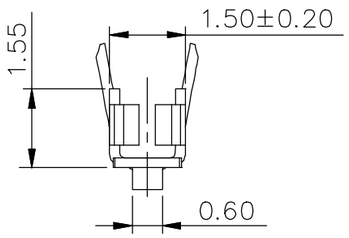

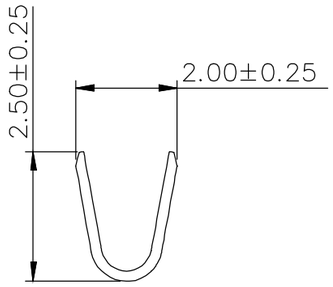

SEC:A-A

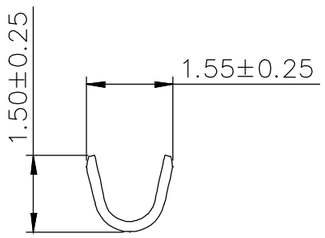

SEC:B-B

RoHS compliant
unit:mm

Scale	Free
TOLERANCE	
X.	±0.35
X.X	±0.25
X.XX	±0.20
X.XXX	±0.15
DIM	TOL
Angle	TOL

Id.	modification	Date	Name
②	Update the dimension	03.19.2025	Peter
①	Add UL E-No. on page 1,2,3,4,6	03.15.2023	Peter
⓪	Drawn	01.10.2022	Peter

	Date	Name
Drawn	01.10.2022	Peter
Approved	03.19.2025	Peter

ASSMANN WSW components

Description: Wire to Board Terminal Pitch 2.00mm

ASSMANN WSW-NO.
A-WBT-K015EG-01CR03

Drawing-No.
ASS 9187 CO

rev02

Customer-No.

SHEET 9 / 9