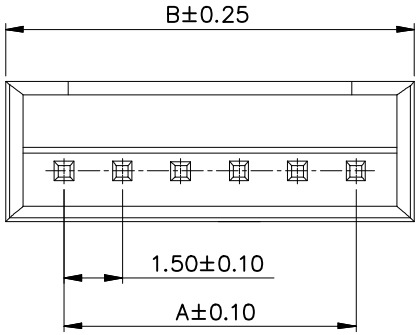

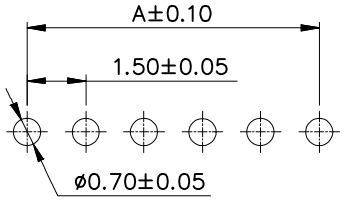

P.C.B LAYOUT

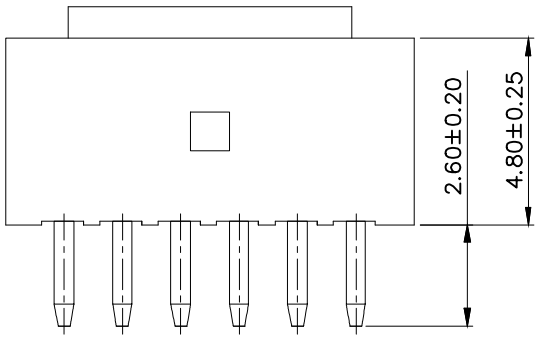

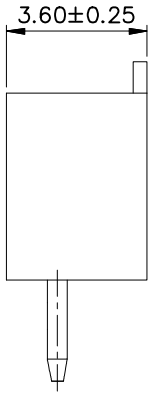

NOTE:

1.MATERIAL
1.1 Insulator:Nylon 66,UL94V-0,White
1.2 Contact:Brass,Tin over Nickel

2.ELECTRIC
① 2.1 Voltage Rating:250V AC/DC
① 2.2 Current Rating:1.5A AC/DC
2.3 Withstanding Voltage:500V AC/minute
2.4 Insulation Resistance:1000MΩ Min

3.Temperature Range:-40°C To +105°C
4.Packing:PE bag

Poles	Part No.	Dimmensions (mm)	
		A	B
02	A-WBP-G004EG-02TB01	1.50	4.50
03	A-WBP-G004EG-03TB01	3.00	6.00
04	A-WBP-G004EG-04TB01	4.50	7.50
05	A-WBP-G004EG-05TB01	6.00	9.00
06	A-WBP-G004EG-06TB01	7.50	10.50
07	A-WBP-G004EG-07TB01	9.00	12.00
08	A-WBP-G004EG-08TB01	10.50	13.50
09	A-WBP-G004EG-09TB01	12.00	15.00
10	A-WBP-G004EG-10TB01	13.50	16.50
11	A-WBP-G004EG-11TB01	15.00	18.00
12	A-WBP-G004EG-12TB01	16.50	19.50
13	A-WBP-G004EG-13TB01	18.00	21.00
14	A-WBP-G004EG-14TB01	19.50	22.50
15	A-WBP-G004EG-15TB01	21.00	24.00

RoHS compliant
unit:mm

Scale	Free
TOLERANCE	
X.	±0.35
X.X	±0.25
X.XX	±0.20
X.XXX	±0.15
DIM	TOL
Angle	TOL

Id.	modification	Date	Name
①	Update the current and voltage	11.09.2024	Peter
⓪	Drawn	01.11.2022	Peter

	Date	Name
Drawn	01.11.2022	Peter
Approved	11.09.2024	Peter

Description: Wire to Board Wafer
Pitch 1.50mm 180° THT

ASSMANN WSW-NO.
A-WBP-G004EG-xxTB01

ASSMANN WSW components

Drawing-No.
ASS 9202 CO

rev01

Customer-No.

SHEET
1 / 5

SV4422

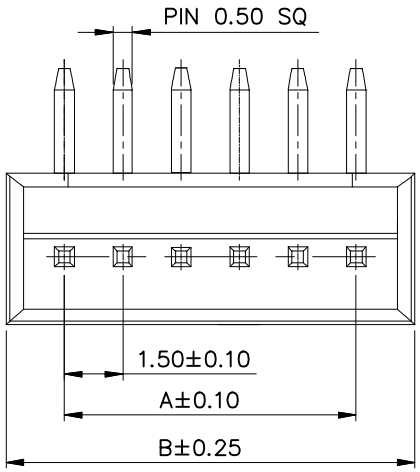

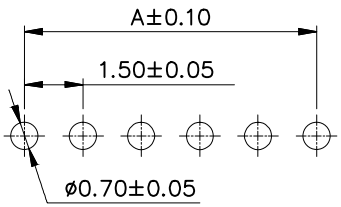

P.C.B LAYOUT

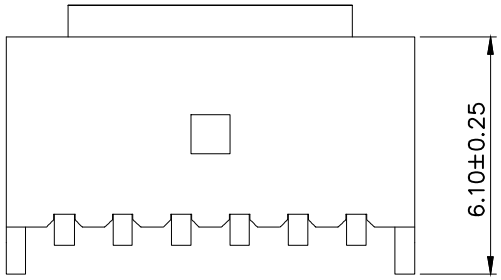

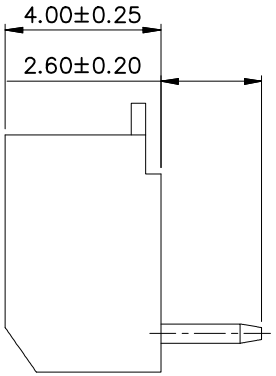

NOTE:

1.MATERIAL
1.1 Insulator:Nylon 66,UL94V-0,White
1.2 Contact:Brass,Tin over Nickel

2.ELECTRIC
① 2.1 Voltage Rating:250V AC/DC
① 2.2 Current Rating:1.5A AC/DC
2.3 Withstanding Voltage:500V AC/minute
2.4 Insulation Resistance:1000MΩ Min

3.Temperature Range:-40°C To +105°C
4.Packing:PE bag

Poles	Part No.	Dimmensions (mm)	
		A	B
02	A-WBP-G004EA-02TB01	1.50	4.50
03	A-WBP-G004EA-03TB01	3.00	6.00
04	A-WBP-G004EA-04TB01	4.50	7.50
05	A-WBP-G004EA-05TB01	6.00	9.00
06	A-WBP-G004EA-06TB01	7.50	10.50
07	A-WBP-G004EA-07TB01	9.00	12.00
08	A-WBP-G004EA-08TB01	10.50	13.50
09	A-WBP-G004EA-09TB01	12.00	15.00
10	A-WBP-G004EA-10TB01	13.50	16.50
11	A-WBP-G004EA-11TB01	15.00	18.00
12	A-WBP-G004EA-12TB01	16.50	19.50
13	A-WBP-G004EA-13TB01	18.00	21.00
14	A-WBP-G004EA-14TB01	19.50	22.50
15	A-WBP-G004EA-15TB01	21.00	24.00

RoHS compliant
unit:mm

Scale	Free
TOLERANCE	
X.	±0.35
X.X	±0.25
X.XX	±0.20
X.XXX	±0.15
DIM	TOL
Angle	TOL

Id.	modification	Date	Name
①	Update the current and voltage	11.09.2024	Peter
⓪	Drawn	01.11.2022	Peter

	Date	Name
Drawn	01.11.2022	Peter
Approved	11.09.2024	Peter

Description: Wire to Board Wafer
Pitch 1.50mm 90° THT

ASSMANN WSW-NO.
A-WBP-G004EA-xxTB01

Drawing-No.
ASS 9202 CO

rev01

Customer-No.

SHEET
2 / 5

SV4422

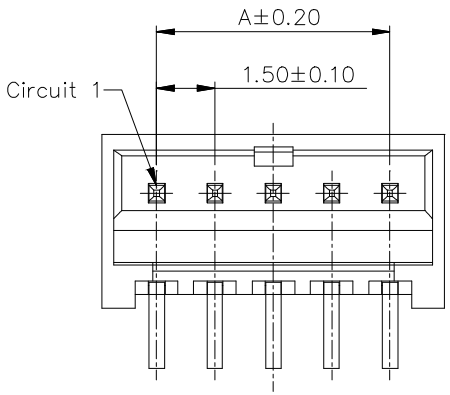

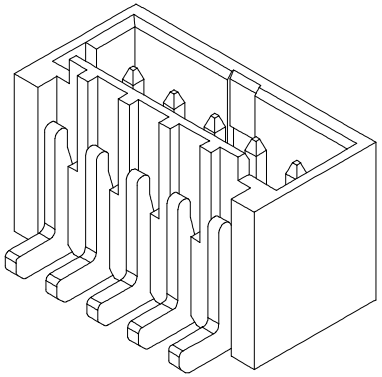

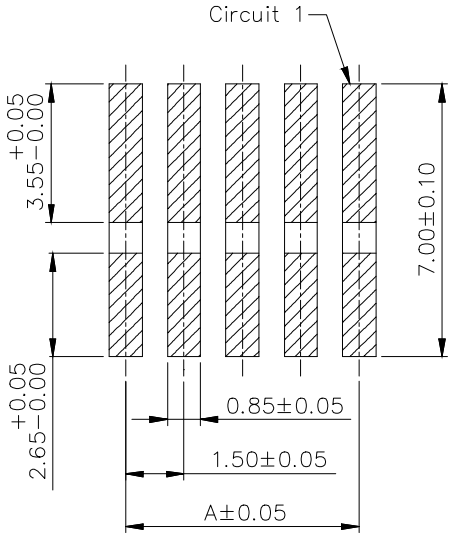

P.C.B LAYOUT

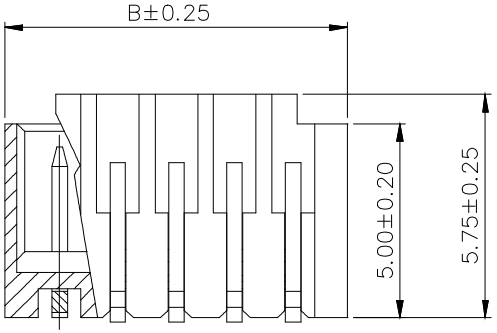

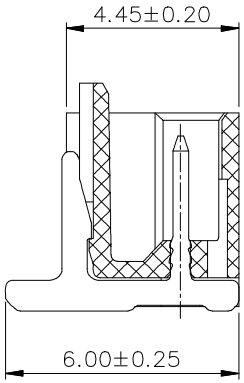

NOTE:

1.MATERIAL
1.1 Insulator:Nylon 6T,UL94V-0,Ivory
1.2 Contact:Brass,Tin over Nickel

2.ELECTRIC
① 2.1 Voltage Rating:250V AC/DC
① 2.2 Current Rating:1.5A AC/DC
2.3 Withstanding Voltage:500V AC/minute
2.4 Insulation Resistance:1000MΩ Min

3.Temperature Range:-40°C To +105°C
4.Packing:Tape&Reel

Poles	Part No.	Dimmensions (mm)	
		A	B
02	A-WBP-G004EG-02SR01	1.50	4.30
03	A-WBP-G004EG-03SR01	3.00	5.80
04	A-WBP-G004EG-04SR01	4.50	7.30
05	A-WBP-G004EG-05SR01	6.00	8.80
06	A-WBP-G004EG-06SR01	7.50	10.30
07	A-WBP-G004EG-07SR01	9.00	11.80
08	A-WBP-G004EG-08SR01	10.50	13.30
09	A-WBP-G004EG-09SR01	12.00	14.80
10	A-WBP-G004EG-10SR01	13.50	16.30
11	A-WBP-G004EG-11SR01	15.00	17.80
12	A-WBP-G004EG-12SR01	16.50	19.30
13	A-WBP-G004EG-13SR01	18.00	20.80
14	A-WBP-G004EG-14SR01	19.50	22.30
15	A-WBP-G004EG-15SR01	21.00	23.80

RoHS compliant

unit:mm

Scale	Free
TOLERANCE	
X.	±0.35
X.X	±0.25
X.XX	±0.20
X.XXX	±0.15
DIM	TOL
Angle	TOL

Id.	modification	Date	Name
①	Update the current and voltage	11.09.2024	Peter
⓪	Drawn	01.11.2022	Peter

	Date	Name
Drawn	01.11.2022	Peter
Approved	11.09.2024	Peter

Description: Wire to Board Wafer
Pitch 1.50mm 180° SMT

ASSMANN WSW-NO.
A-WBP-G004EG-xxSR01

ASSMANN WSW components

Drawing-No.
ASS 9202 CO

rev01

Customer-No.

SHEET
3 / 5

SV4422

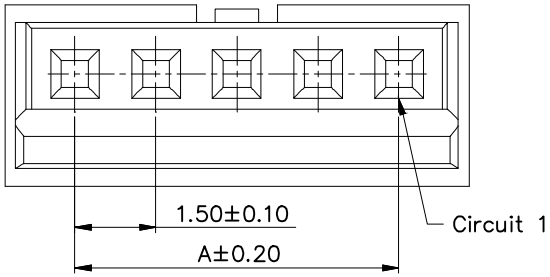

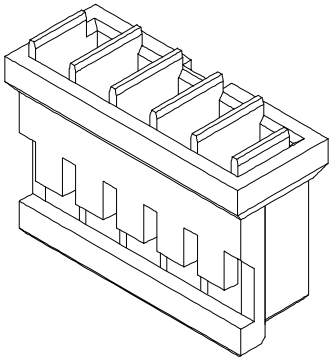

NOTE:

1.MATERIAL
1.1 Insulator:Nylon 6T,UL94V-0,White

2.ELECTRIC
① 2.1 Voltage Rating:250V AC/DC
① 2.2 Current Rating:1.5A AC/DC
2.3 Withstanding Voltage:500V AC/minute
2.4 Insulation Resistance:1000MΩ Min

3.Temperature Range:-40°C To +105°C
4.Packing:PE bag

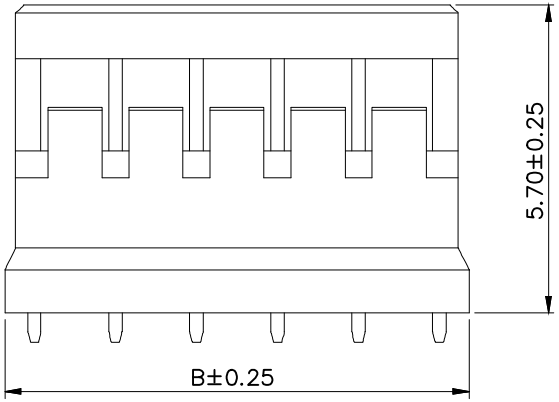

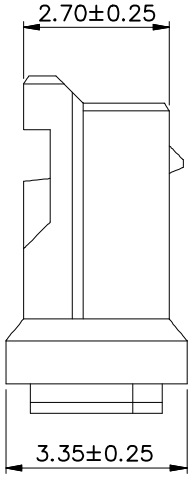

Poles	Part No.	Dimmensions (mm)	
		A	B
02	A-WBH-G004EG-02CB01	1.50	4.10
03	A-WBH-G004EG-03CB01	3.00	5.60
04	A-WBH-G004EG-04CB01	4.50	7.10
05	A-WBH-G004EG-05CB01	6.00	8.60
06	A-WBH-G004EG-06CB01	7.50	10.10
07	A-WBH-G004EG-07CB01	9.00	11.60
08	A-WBH-G004EG-08CB01	10.50	13.10
09	A-WBH-G004EG-09CB01	12.00	14.60
10	A-WBH-G004EG-10CB01	13.50	16.10
11	A-WBH-G004EG-11CB01	15.00	17.60
12	A-WBH-G004EG-12CB01	16.50	19.10
13	A-WBH-G004EG-13CB01	18.00	20.60
14	A-WBH-G004EG-14CB01	19.50	22.10
15	A-WBH-G004EG-15CB01	21.00	23.60

RoHS compliant
unit:mm

Scale	Free
TOLERANCE	
X.	±0.35
X.X	±0.25
X.XX	±0.20
X.XXX	±0.15
DIM	TOL
Angle	TOL

Id.	modification	Date	Name
①	Update the current and voltage	11.09.2024	Peter
⓪	Drawn	01.11.2022	Peter

	Date	Name
Drawn	01.11.2022	Peter
Approved	11.09.2024	Peter

ASSMANN WSW components

Description: Wire to Board Housing
Pitch 1.50mm

ASSMANN WSW-NO.
A-WBH-G004EG-xxCB01

Drawing-No.
ASS 9202 CO

rev01

Customer-No.

SHEET
4 / 5

SV4422

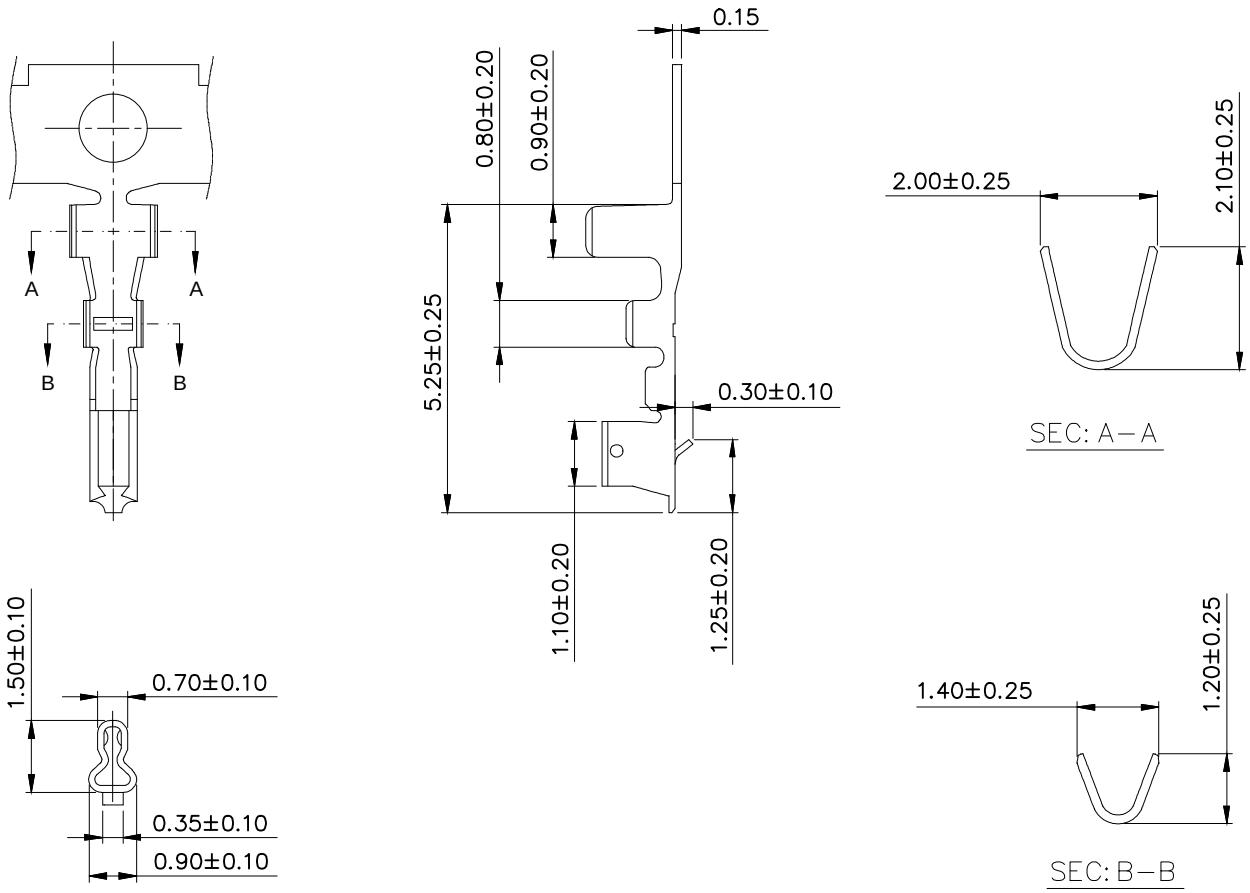

NOTE:

1.MATERIAL
1.1 Contact:Phosphor Bronze,Tin over Nickel

2.ELECTRIC
① 2.1 Voltage Rating:250V AC/DC
① 2.2 Current Rating:1.5A AC/DC
2.3 Withstanding Voltage:500V AC/minute
2.4 Contact Resistance:20mΩ Max

3.Temperature Range:-40°C To +105°C
4.Applicable Wire:AWG#24-#28
5.Packing:Reel

RoHS compliant
unit:mm

Scale	Free
TOLERANCE	
X.	±0.35
X.X	±0.25
X.XX	±0.20
X.XXX	±0.15
DIM	TOL
Angle	TOL

Id.	modification	Date	Name
①	Update the current and voltage	11.09.2024	Peter
⓪	Drawn	01.11.2022	Peter

	Date	Name
Drawn	01.11.2022	Peter
Approved	11.09.2024	Peter

ASSMANN WSW components

Description: Wire to Board Terminal
Pitch 1.50mm

ASSMANN WSW-NO.
A-WBT-G004EG-01CR01

Drawing-No.
ASS 9202 CO

rev01

Customer-No.

SHEET
5 / 5

SV4422