KYCON, Inc. 305 Digital Drive, Morgan Hill, CA 95037 (408)494-0330

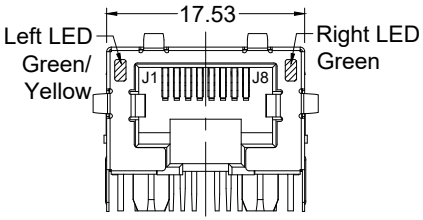

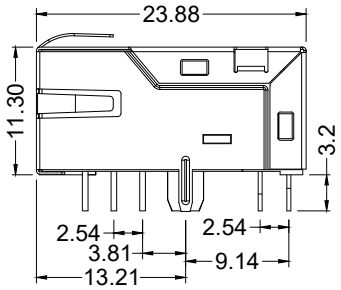

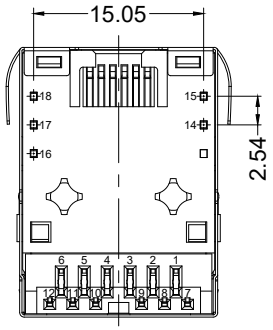

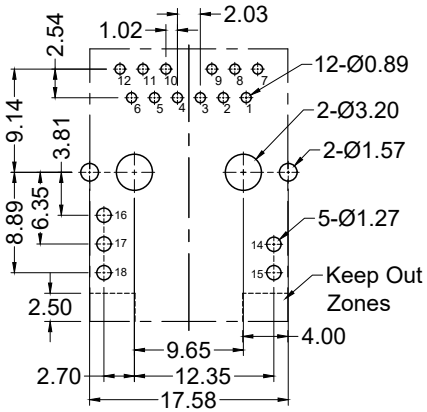

Recommended PCB Layout
(Component Side)

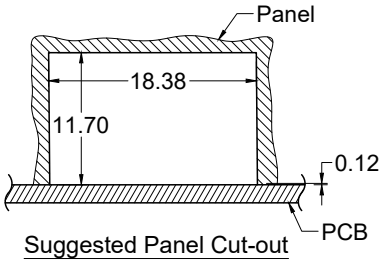

Suggested Panel Cut-out

Magnetics Schematic

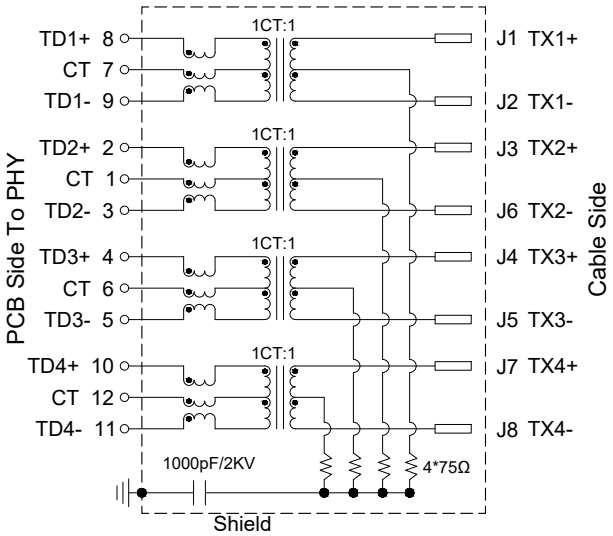

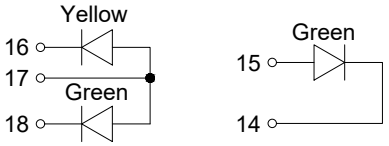

Left LED Right LED

LED Specification

LED Color	LED Wavelength	Forward(A)	Forward(V)
Green	568nm	20mA	1.85~2.45V
Yellow	585nm	20mA	1.7~2.2V

Materials and Finish

Housing Material:
High Temperature Thermoplastic, UL 94V-0 Rated, Color: Black

Shield: Brass, Nickel Plated

Contact Material:
Phosphor Bronze

Contact Plating:
Nickel Underplating, W/ 50u" Gold Plating on Contact Area,

Electrical Characteristics

Dielectric Withstanding Voltage:
2250V DC for 60 Seconds
Primary to Secondary

Mechanical Characteristics

Mating Force: 23N Max.

Durability Rating:
750 Mating Cycles Min.

Operating Temperature:
-40°C to +85°C

Electrical Properties Of Magnetics

Insertion Loss (dB Max)		Return Loss (dB Min)			Cross Talk (dB Min)		CMR (dB Min)			CDMR (dB Min)		OCL (uH Min)
100 KHz	1~400 MHz	1~40 MHz	40~400 MHz	400~500 MHz	1~100 MHz	100~500 MHz	1~40 MHz	40-100 MHz	100~500 MHz	1-250 MHz	250~500 MHz	@100 KHz & 100 mV, 8 mA
-3.0	-2.0(-1.4 Typ)	-16	-16+10Log(f/40)	-6+30Log(f/400)	-28	-19	-30	-28	-26	-30	-22	160

RoHS COMPLIANT

Tolerances
X.X ± 0.30
X.XX ± 0.25
Unless Stated Otherwise

REV.	DATE	DESCRIPTION	REV. BY	CHK. BY	DRAWN BY	DATE
A0	07/11/24	New Drawing	C. Kelleher	C. Kelleher	C. Kelleher	07/01/24
A1	11/25/24	Release Drawing	C. Kelleher	N/A		
					UNITS	
					mm	

G13RLX-188S7-10G-GY/G-50

Mag Jack, 10G Magnetics, Reversed, Fully Shielded,

Top & Side EMI Tabs, Grn/Yel & Grn LEDs, RoHS

KYCON