KYCON, Inc. 305 Digital Drive, Morgan Hill, CA 95037 (408)494-0330

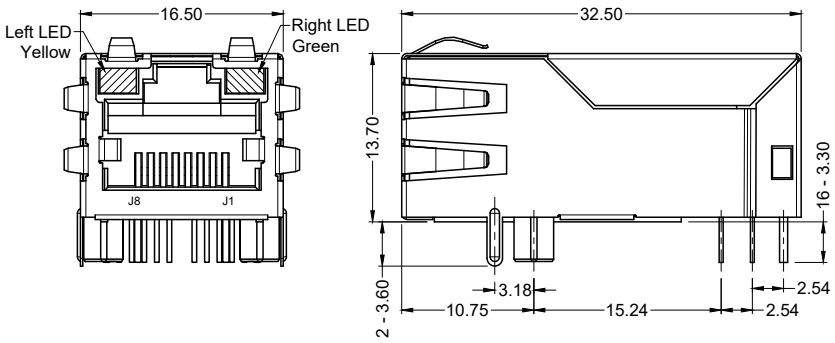

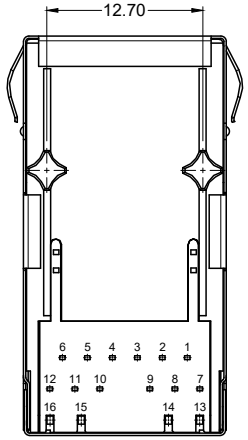

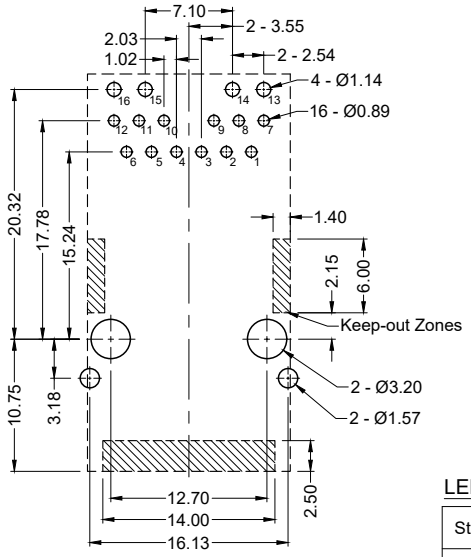

Recommended PCB Layout
(Top View)

Magnetics Schematic

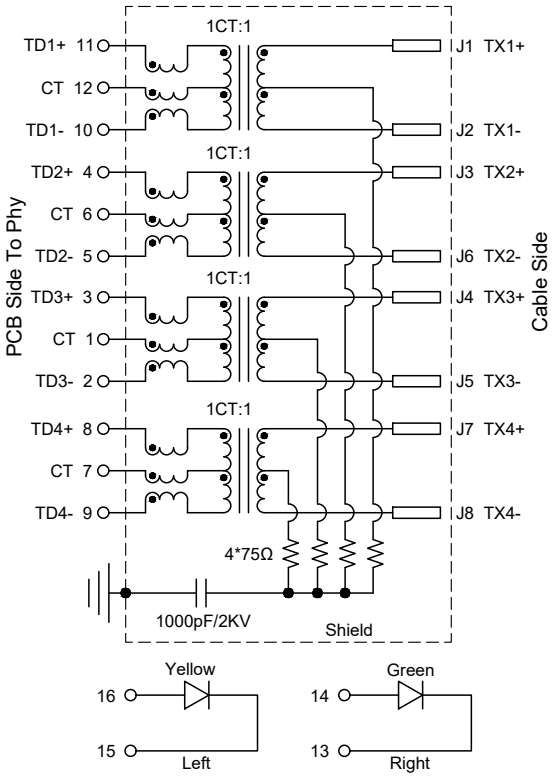

Materials and Finish

Housing: PBT Thermoplastic
UL 94V-0 Rated
Color: Black

Shield: Brass, Nickel Plated

Contact Material: Phosphor Bronze

Contact Plating:
Nickel Underplating,
30u" Gold Plating on Contact Area

Electrical Characteristics

Dielectric Withstanding Voltage:
2250V DC 1mA Pri. to Sec.

Mechanical Characteristics

Durability Rating:
750 Mating Cycles Min.
Mating Force: 23N Max.
Operating Temperature:
-40°C to +85°C

LED Specification

Standard LED Color	LED Wavelength	Foward(A)	Foward(V)
Green	568nm	20mA	1.85-2.45V
Yellow	585nm	20mA	1.7-2.2V

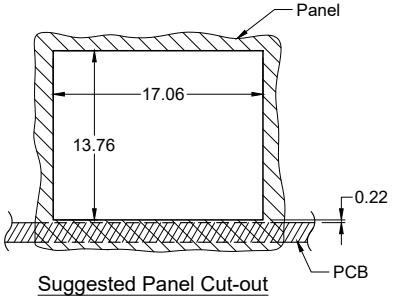

Suggested Panel Cut-out

Electrical Properties Of Magnetics

Insertion Loss (dB Max)		Return Loss (dB Min)		Cross Talk (dB Min)		CMR (dB Min)			OCL (uH Min)
100 MHz	1~400 MHz	1~100 MHz	100~500 MHz	1~100 MHz	100~500 MHz	1~40 MHz	40~100 MHz	100~500 MHz	@100 KHz, 0.1 V, 15mA DC Bias
-3.0	-2.0(-1.4 Typ)	-22	-22+20.75Log(f/100)	-28	-19	-30	-28	-26	160

RoHS COMPLIANT

Tolerances
X.X ± 0.30
X.XX ± 0.25
Unless Stated Otherwise

REV.	DATE	DESCRIPTION	REV. BY	CHK. BY	DRAWN BY	DATE
A0	07/10/24	New Drawing	C. Kelleher	C. Kelleher	C. Kelleher	07/08/24
A1	11/25/24	Release Drawing	C. Kelleher	N/A		UNITS
						mm

G16LX-112S7-10G-Y/G-30

Mag Jack, 10G Magnetics, Fully Shielded, Top & Side EMI Tabs, Yel & Grn LEDs, 30u, RoHS Compliant

KYCON