REV.	ECN NO.	DATE	SIGN	DESCRIPTION
A		2019/04/10	Bovan Lu	Initial Released
B	C230552	2023/05/05	Ruru	B X8
C	C231518	2023/12/05	Ruru	C X1

B

B TA-AXXF-AXXF-AXXF-01

XX: No. Of Pin

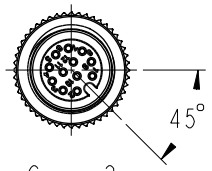

Conn.2

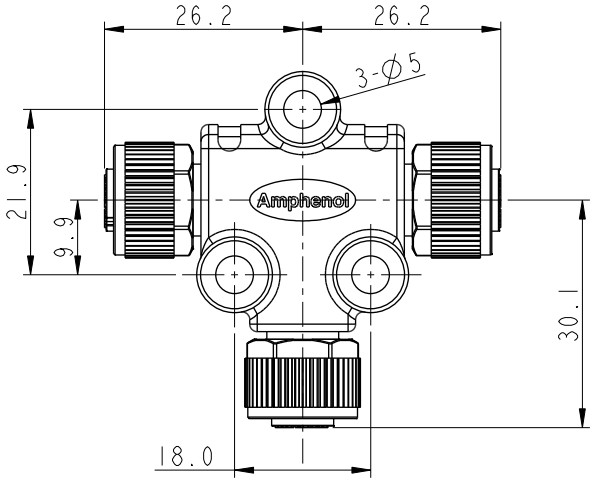

Front View

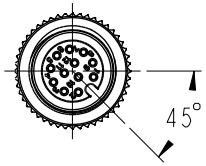

Conn.3

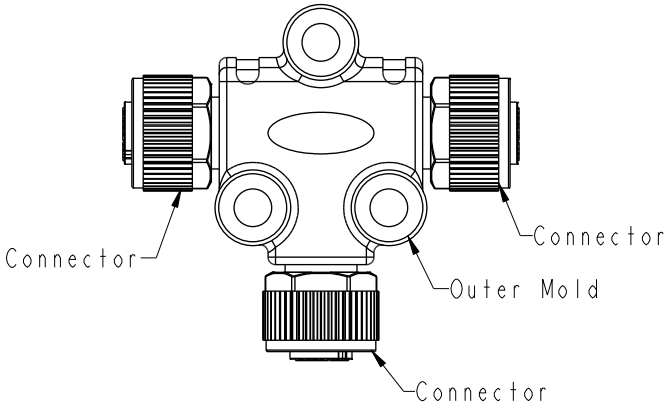

Back View

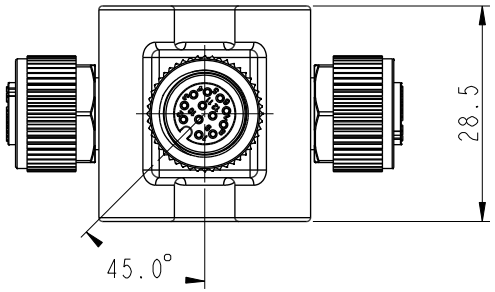

Conn.1

B Note:
- * RoHS Compliant
- * QC Important dimension
- * Waterproof rate: IP68, mated 1m/24h
- * Connector
  - Housing: Thermoplastic, Black
  - Pin: Copper alloy, Gold plated
  - O-Ring: Rubber, Green
  - Nut: Metal
- * Outer Mold: Thermoplastic, Black
- C * Wire: 3~5 Pin: UL1061, 22AWG
  - 6~8 Pin: UL1061, 24AWG
  - 10~12 Pin: UL1061, 26AWG

UNIT: mm	TITLE: ACC, SEN, A Code, T ADA W/O CB FFF B	Amphenol LTW 安費諾亮泰企業股份有限公司	ITEM NO	DRAWN BY: Ruru	DATE: 2023-12-05
TOLERANCE ±0.5mm	SCALE: 1:1 / SIZE: A4 / SHEET 1 OF 2		DWG NO: B TA-AXXF-AXXF-AXXF-01	CHECKED BY: Rita	DATE: 2023-12-05
	REV. C / WC-REV. .0	QC: Inspection item	CUSTOMER: ALTW	APPROVED BY: Fred	DATE: 2023-12-05

W10814-03-RW01A2

THIS DOCUMENT IS SUBJECT TO CHANGE WITHOUT NOTICE. IT IS CONFIDENTIAL AND A PROPERTY OF Amphenol LTW. DISCLOSURE TO THIRD PARTY HAS TO BE AUTHORIZED BY Amphenol LTW.

B

	A-code						
	3 Pin	4 Pin	5 Pin	6 Pin	8 Pin	10 Pin	12 Pin
Conn.	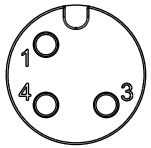	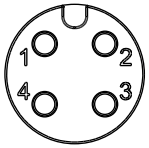	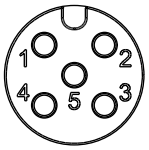	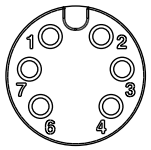	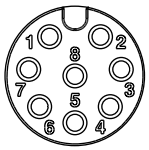	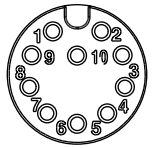	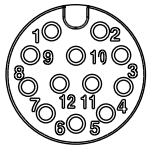
	Pin# Color	Pin# Color	Pin# Color	Pin# Color	Pin# Color	Pin# Color	Pin# Color
Pin Out	Pin1 Black Pin3 White Pin4 Blue	Pin1 Black Pin2 White Pin3 Blue Pin4 Green	Pin1 Black Pin2 White Pin3 Blue Pin4 Green Pin5 Red	Pin1 Black Pin2 White Pin3 Blue Pin4 Green Pin6 Red Pin7 Gray	Pin1 Black Pin2 White Pin3 Blue Pin4 Green Pin5 Red Pin6 Gray Pin7 Yellow Pin8 Orange	Pin1 Black Pin2 White Pin3 Blue Pin4 Green Pin5 Red Pin6 Gray Pin7 Yellow Pin8 Orange Pin9 Brown Pin10 Purple	Pin1 Black Pin2 White Pin3 Blue Pin4 Green Pin5 Red Pin6 Gray Pin7 Yellow Pin8 Orange Pin9 Brown Pin10 Purple Pin11 White/Red Pin12 Pink

Pin Assignments Front View

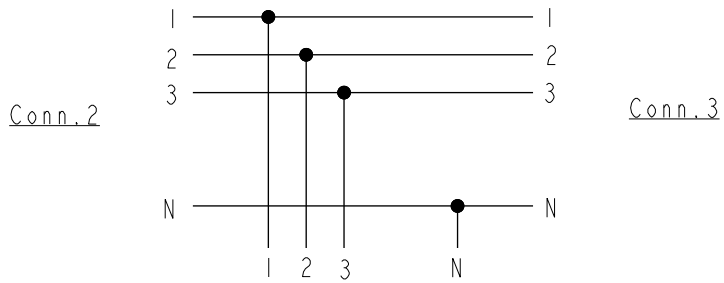

Connection Diagram

UNIT:mm

TOLERANCE

TITLE: ACC, SEN, A Code, T ADA W/O CB FFF (B)

SCALE	SIZE	SHEET
1:1	A4	2 OF 2
REV. C	WC-REV. .0	QC: Inspection item

Amphenol LTW

安費諾亮泰企業股份有限公司

ITEM NO	DRAWN BY: Ruru	DATE: 2023-12-05
DWG NO: (B) TA-AXXF-AXXF-AXXF-01	CHECKED BY: Rita	DATE: 2023-12-05
CUSTOMER: ALTW	APPROVED BY: Fred	DATE: 2023-12-05

WI0814-03-[redacted]01A2

THIS DOCUMENT IS SUBJECT TO CHANGE WITHOUT NOTICE. IT IS CONFIDENTIAL AND A PROPERTY OF Amphenol LTW. DISCLOSURE TO THIRD PARTY HAS TO BE AUTHORIZED BY Amphenol LTW.