Rev	AWO #	Description	Date	Appr
-		RELEASED	11/26/13	

APPROVED: _____

DATE: _____ TITLE: _____

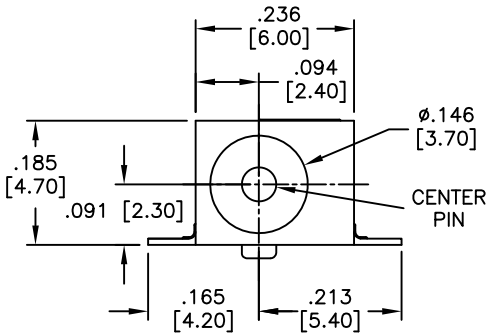

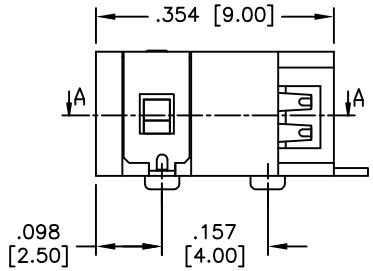

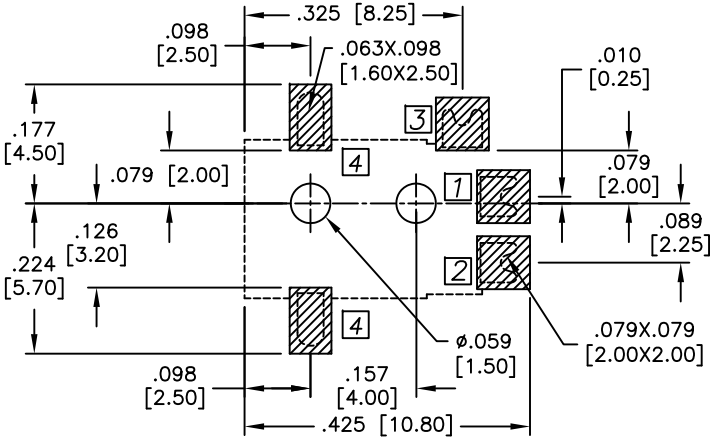

RECOMMENDED PCB LAYOUT
(TOP VIEW)

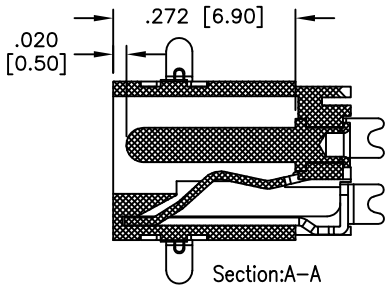

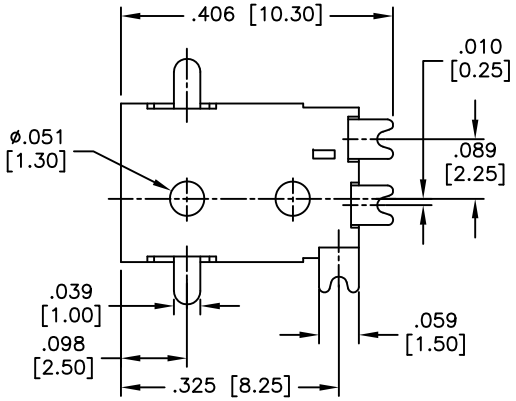

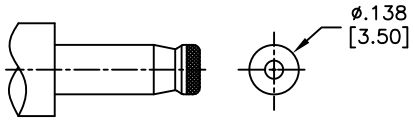

DC MALE PLUG

PACKAGED ON TAPE & REEL

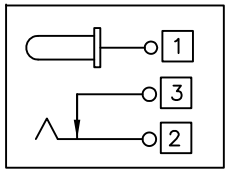

PART NO.	CENTER PIN DIA.
ADC–037–3–T/R	ø.039 [1.00]
ADC–037–4–T/R	ø.051 [1.30]

SPECIFICATIONS:
Material:
Insulator: Hi–temp thermoplastic, rated UL 94V–0
Insulator color: Black
Contacts: Copper Alloy, Silver plated
Center Pin: Brass, Nickel plated
Electrical:
Operating voltage: 12 VDC max.
Current rating: 1 Amps
Contact resistance: 30 mohms max.
Insulation resistance: 100 Mohms min.
Dielectric withstanding voltage: 500 VAC for 1 minute
Temperature Rating:
Operating temperature: –20˚C to +70˚C
Environmental:
Lead free, RoHS compliant

RoHS COMPLIANT

UNLESS OTHERWISE SPECIFIED
ALL DIMENSIONS ARE INCHES [MM]
TOLERANCES: EXCEPT AS NOTED

INCHES		HOLES	
.X	± .10	Ø.X	±.10
.XX	± .020	Ø.XX	±.015
.XXX	± .015	Ø.XXX	±.010

APPROVALS		DATE
DRAWN	AY	11/26/13
CHECKED	AH	11/26/13
APPROVED		

ADAM TECH
909 Rahway Avenue, Union, NJ 07083
Phone: 908-687-5000 Fax: 908-687-5710

TITLE
DC POWER JACK, 1.00mm, 1.30mm CENTER PIN

SIZE	PART NO.	REV.
X	ADC-037-X-T/R	-

REF: S00002C | SCALE: NTS | SHEET 1 OF 1