Rev	AWO #	Description	Date	Appr
-		RELEASED	11/16/18	
A		ADDED DRAWING	6/27/19	AY/TW

APPROVED: _____

DATE: _____ TITLE: _____

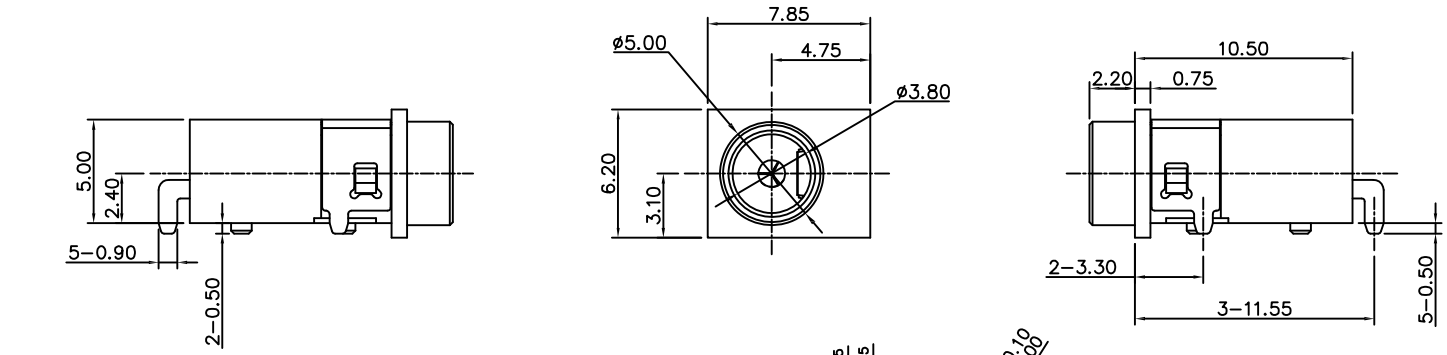

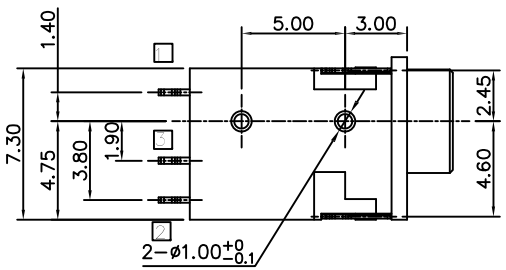

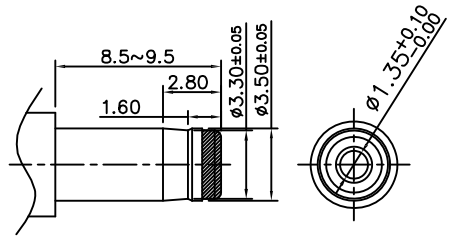

DC MATE PLUG

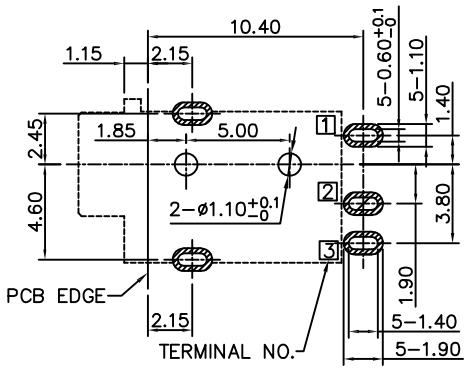

RECOMMENDED PCB LAYOUT

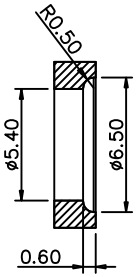

Recommended open dimension of case
TOLERANCE: ±0.03mm
MATTING AREA WITH SEALING RING

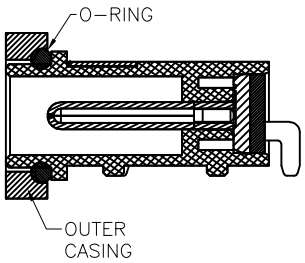

ASSEMBLY VIEW
(REFERENCE ONLY)

PACKAGED ON TAPE & REEL

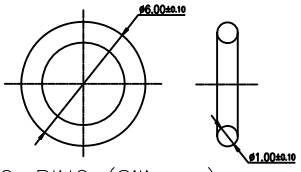

O–RING (Silicone)

SPECIFICATIONS:
Material:
Insulator: Hi–Temp Thermoplastic, rated UL 94V–0
Insulator color: Black
Center Pin: Copper Alloy
Contacts: Copper Alloy
Shield: Brass, Nickel plated
Plating:
Gold flash over Nickel underplate overall
Electrical:
Rating: 16VDC, 3.5A
Contact resistance: 30 mohms max.
Insulation resistance: 100 Mohms min @ 500 VDC.
Dielectric withstanding voltage: 500 VAC
Temperature Rating:
Operating temperature: –20°C to +70°C
Environmental:
ingress protection rating: IPX7
Lead free, RoHS compliant

RoHS COMPLIANT

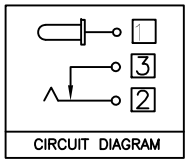

CIRCUIT DIAGRAM

UNLESS OTHERWISE SPECIFIED
ALL DIMENSIONS ARE MILLIMETERS
TOLERANCES: EXCEPT AS NOTED

MM		ANGLE	
.X	± 0.38	X	± 5°
.XX	± 0.30	.X	± 3°
.XXX	± 0.15	.XX	± 2°

APPROVALS		DATE
DRAWN	HR	11/16/18
CHECKED	AC1	11/16/18
APPROVED		

ADAM TECH INTERCONNECTS
909 Rahway Avenue,
Union, NJ 07083
Phone: 908-687-5000
Fax: 908-687-5710

TITLE
DC POWER JACK, 1.30MM CENTER PIN, WATER PROOF

SIZE	PART NO.	REV.
X	ADC-114B-4-WP-HT-T/R	A

REF: S00002C | SCALE: NTS | SHEET 1 OF 1