DRW NO.	SH	REV
C-951-200C-500	1	D

ZONE	REV	SCR NUMBER	DESCRIPTION	BY	DATE	APPROVED
ALL	A	AASY-7X7Q28.VER01	NEW RELEASE	HCL-MH	10/22/2009	D.SMITH
	B	AASY-869J4Z.VER01	ADDED XTALIC PN'S	HCL-MG	06/15/2010	D.SMITH
SHT-1 C7 SHT-1 C4,A8 SHT-1 B5	C	DCOY-9X5GQ3.VER01	REMOVED N AND Z LETTER FROM POL GUIDE TABLE. UPDATED PIN STYLE TABLE. ADDED NOTE 11. ADDED 1.5mm SIGNAL WIPE.	HCL-NB	06/15/2015	D.COVERY
	D	DCOY-A83N3K.VER01	UPDATED PART MARKING NOTE	HCL-SD	03/29/2016	D.COVEY

9 5 1 - 2 X 0 C - X X X

- 951 — XCede BACKPLANE MODULE MALE STANDARD LOAD
- 2 — 2 PAIR
- 0 — 6-POSITION

	LETTER								
LEFT POLARIZING GUIDANCE (SEE SHEET 3)	J (NO KEY)	A	B	C	D	E	F	G	H
RIGHT POLARIZING GUIDANCE (SEE SHEET 4)	Y (NO KEY)	P	Q	R	S	T	U	V	W
OPEN (SEE SHEET 2)	O (ZERO)								
LEFT WALL (SEE SHEET 5)	L								
RIGHT WALL (SEE SHEET 6)	M								
TWO WALL (SEE SHEET 7)	1								

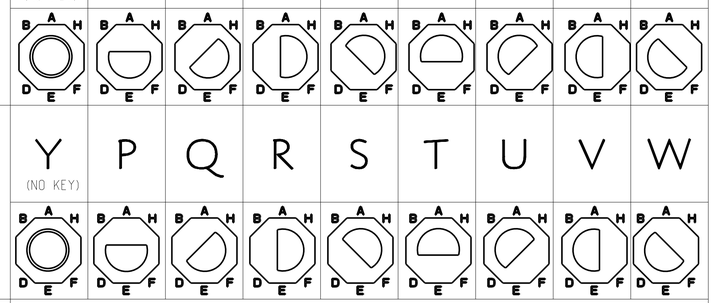

PLATING (4)	
LETTER	DESCRIPTION
B	Ni SULFAMATE, STANDARD GOLD, LEADED
C	Ni SULFAMATE, HIGH GOLD, LEADED
D	Ni SULFAMATE, STANDARD GOLD, LEAD-FREE
E	Ni SULFAMATE, HIGH GOLD, LEAD-FREE
F	NANO Ni, STANDARD GOLD, LEADED
G	NANO Ni, HIGH GOLD, LEADED
H	NANO Ni, STANDARD GOLD, LEAD-FREE
J	NANO Ni, HIGH GOLD, LEAD-FREE

NUMBER	PIN STYLE, HEIGHT (11)
0	GUIDE PIN MACHINED, 25.7mm / NONE
1	GUIDE PIN MACHINED, 25.7mm

NUMBER	SIGNAL & LG. GROUND WIPE LENGTH, COMPLIANT PIN SIZE
1	2 mm WIPE SIGNAL, 4 mm WIPE LG GND, Ø0.0217" DRILL
2	3 mm WIPE SIGNAL, 4 mm WIPE LG GND, Ø0.0217" DRILL
3	2 mm WIPE SIGNAL, 4 mm WIPE LG GND, Ø0.0177" DRILL
4	3 mm WIPE SIGNAL, 4 mm WIPE LG GND, Ø0.0177" DRILL
5	2 mm WIPE SIGNAL, 3 mm WIPE LG GND, Ø0.0217" DRILL
6	3 mm WIPE SIGNAL, 3 mm WIPE LG GND, Ø0.0217" DRILL
7	2 mm WIPE SIGNAL, 3 mm WIPE LG GND, Ø0.0177" DRILL
8	3 mm WIPE SIGNAL, 3 mm WIPE LG GND, Ø0.0177" DRILL
C	1.5 mm WIPE SIGNAL, 4 mm WIPE LG GND, Ø0.0217" DRILL
D	1.5 mm WIPE SIGNAL, 3 mm WIPE LG GND, Ø0.0217" DRILL
E	1.5 mm WIPE SIGNAL, 4 mm WIPE LG GND, Ø0.0177" DRILL
F	1.5 mm WIPE SIGNAL, 3 mm WIPE LG GND, Ø0.0177" DRILL

NOTES:

1. REFER TO TB-2150 FOR XCede PRODUCT SPECIFICATIONS.
2. (2) NOTCH DESIGNATES "ROW A" SIDE OF SHROUD. NOTCH FEATURE ON OPPOSITE SIDE FROM PART MARKING.
3. SEE TB-2325 FOR PART MARKING REQUIREMENTS.
4. (4) PLATING THICKNESS OF SIGNAL CONTACT AND GROUND CONTACT IS DETERMINED BY PLATING CODE. SEE PART NUMBER TREE SHEET 1.
5. REPAIR PROCEDURE FOR MODULE. SEE TB-2210.
6. (6) SEE TB-2149 FOR ROUTING GUIDELINES & PTH REQ'S.
7. (7) SEE DOC C190-1001-000 FOR TOOLING KEEPOUT ZONES.
8. (8) BACKPLANE DATUM REFERENCE.
9. (9) OPTIONAL HOLE/MOUNTING SCREW LOCATION FOR GROUNDED PIN OR ADDITIONAL GUIDE PIN SUPPORT. REFER TO TB-2211 FOR PROPER GUIDE PIN SELECTION AND DRAWING C942-2010-000 FOR OPTIONAL HOLE DETAILS. ONLY APPLIES FOR MACHINED GUIDE PIN APPLICATIONS.
10. DIMENSIONS APPLY FOR BOTH COMPLIANT PIN SIZES.
11. (11) GUIDE PIN OPTION "1" ORIGINALLY CALLED FOR A ROLLED GUIDE PIN, WHICH HAS BEEN REPLACED BY A MACHINED ONE. ONLY LEGACY 951 SERIES MODULES WILL USE THIS OPTION.

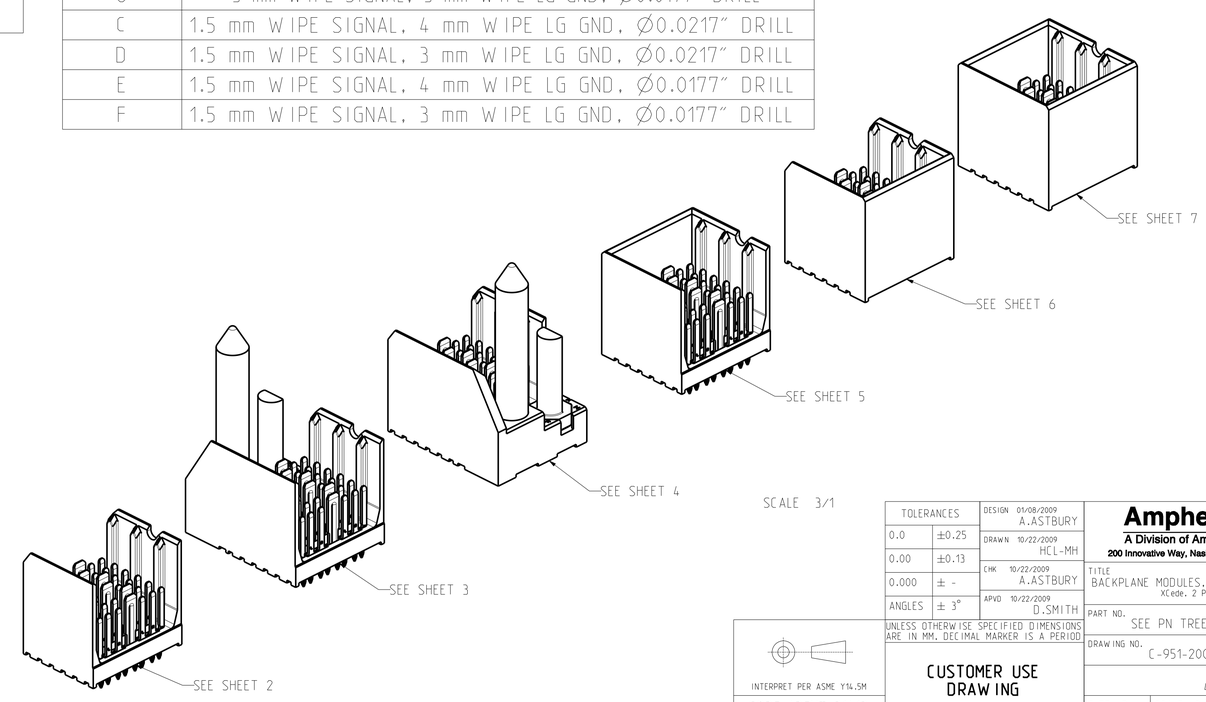

SCALE 3/1

TOLERANCES	
0.0	±0.25
0.00	±0.13
0.000	± -
ANGLES	± 3°

UNLESS OTHERWISE SPECIFIED DIMENSIONS ARE IN MM. DECIMAL MARKER IS A PERIOD

DESIGN 01/08/2009 A.ASTBURY
DRAWN 10/22/2009 HCL-MH
CHK 10/22/2009 A.ASTBURY
APVD 10/22/2009 D.SMITH

INTERPRET PER ASME Y14.5M

CUSTOMER USE DRAWING

CODE IDENT 31413

Amphenol TCS
A Division of Amphenol Corporation
200 Innovative Way, Nashua, NH 03062 603.879.3000

TITLE BACKPLANE MODULES, VERTICAL MALE HEADER
XCede, 2 PAIR 6 POSITION

PART NO. SEE PN TREE SHEET 1 — REV N/A
DRAWING NO. C-951-200C-500 — REV D
ASSEM: C951-2-BP2 3.4
DRAWING: C951-200C-500 B.4

SIZE D | SCALE 3/1 | SHEET 1 OF 8

DRW NO. C-951-200C-500 | SH 1 | REV D

DRW NO.	SH	REV
C-951-200C-500	2	D

ZONE	REV	SCR NUMBER	DESCRIPTION	BY	DATE	APPROVED
			SEE SHEET 1			

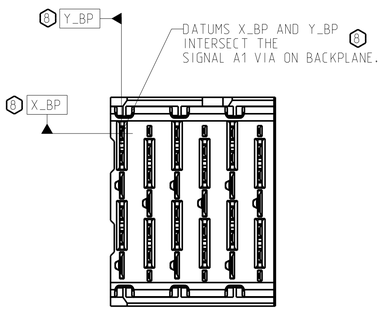

OPEN BACKPLANE MODULE DIMENSION

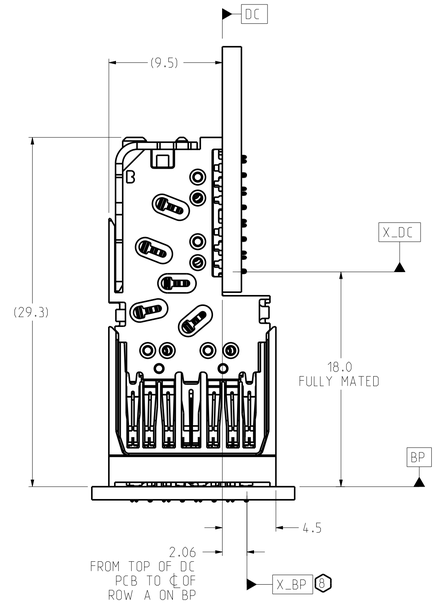

CONNECTOR REFERENCE
SCALE 4/1

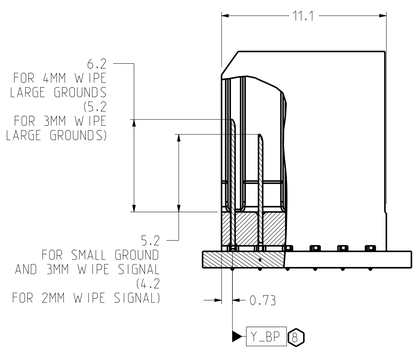

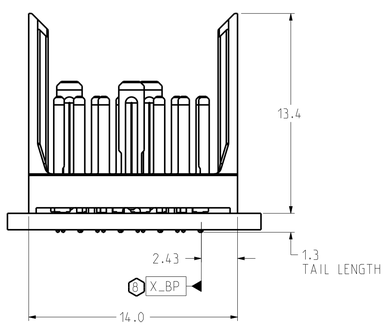

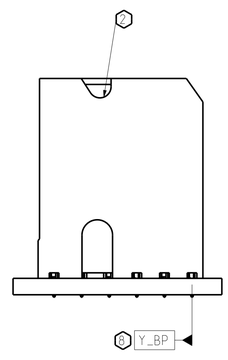

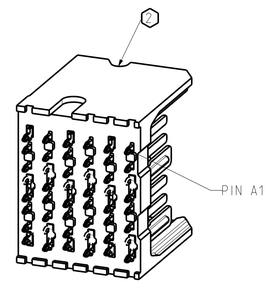

ISOMETRIC VIEW
SCALE 4/1

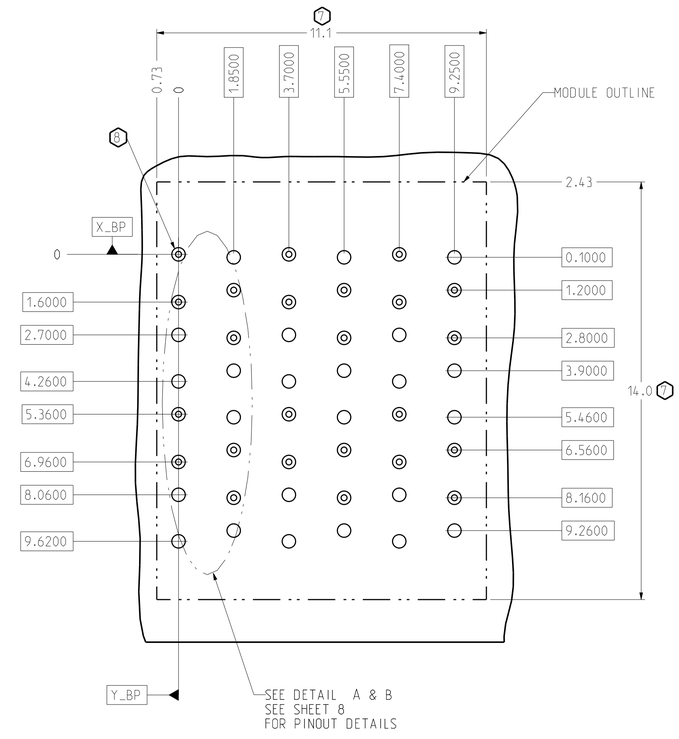

BP HOLE PATTERN
COMPONENT SIDE
SCALE 10/1

OPEN BACKPLANE FOOTPRINT

TOLERANCES	
0.0	±0.25
0.00	±0.13
0.000	± -
ANGLES	± 3°

UNLESS OTHERWISE SPECIFIED DIMENSIONS ARE IN MM. DECIMAL MARKER IS A PERIOD

INTERPRET PER ASME Y14.5M

CODE IDENT 31413

CUSTOMER USE DRAWING

DESIGN 01/08/2009	A.ASTBURY
DRAWN 10/22/2009	HCL-MH
CHK 10/22/2009	A.ASTBURY
APVD 10/22/2009	D.SMITH

Amphenol TCS
A Division of Amphenol Corporation
200 Innovative Way, Nashua, NH 03062 603.879.3000

TITLE
BACKPLANE MODULES, VERTICAL MALE HEADER
XCede, 2 PAIR 6 POSITION

PART NO.	SEE PN TREE SHEET 1	REV N/A
DRAWING NO.	C-951-200C-500	REV D
	ASSEM: C951-2-BP2 DRAWING: C951-200C-500	3.4 B.4

SIZE D | SCALE 1/1 | SHEET 2 OF 8

DRW NO. C-951-200C-500 SH 2 REV D

ZONE	REV	SCR NUMBER	DESCRIPTION	BY	DATE	APPROVED
			SEE SHEET 1			

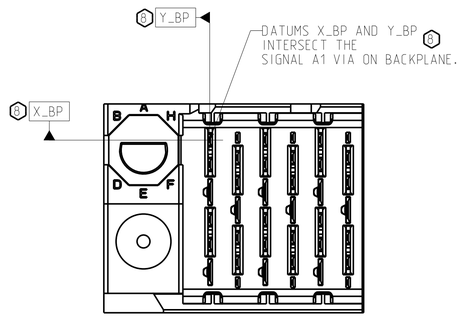

LEFT POLARIZING/GUIDE BACKPLANE MODULE DIMENSION

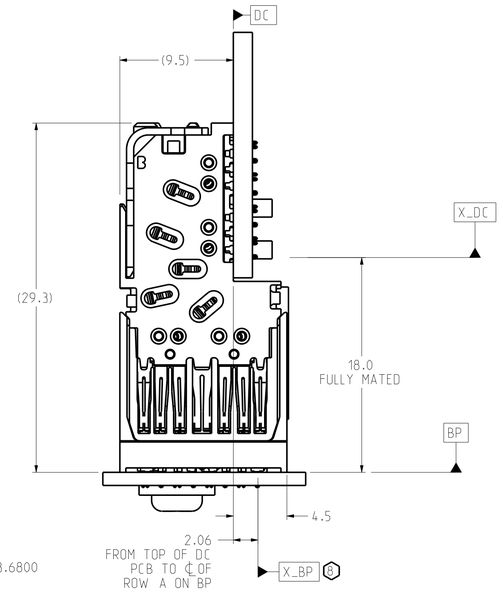

CONNECTOR REFERENCE
SCALE 4/1

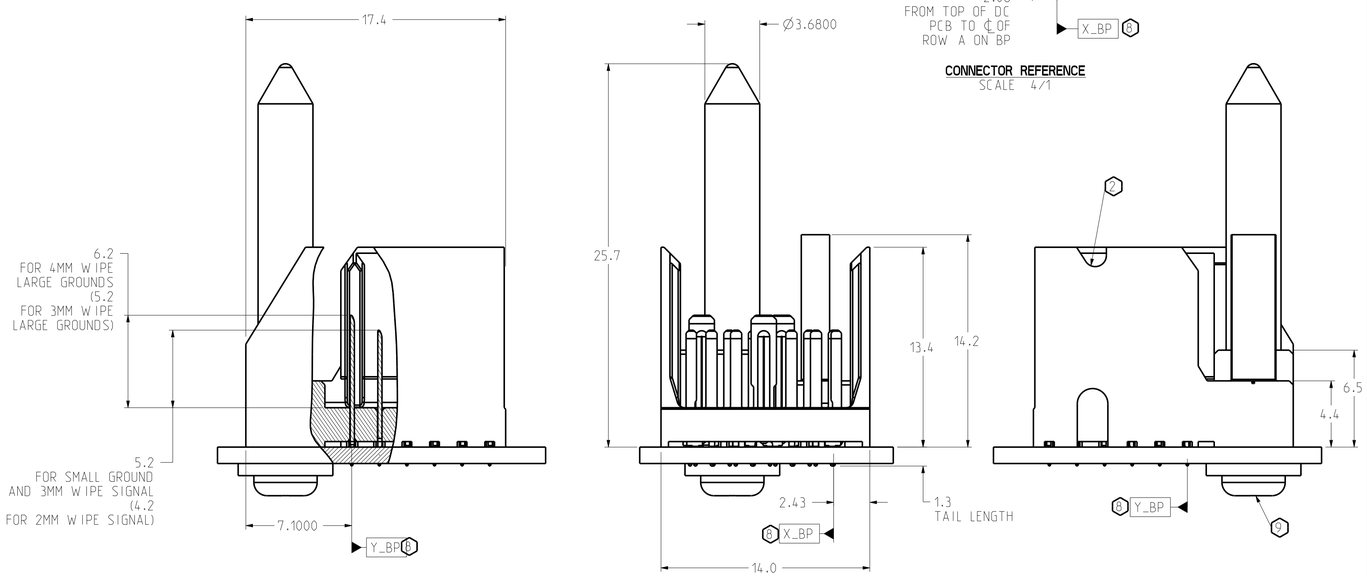

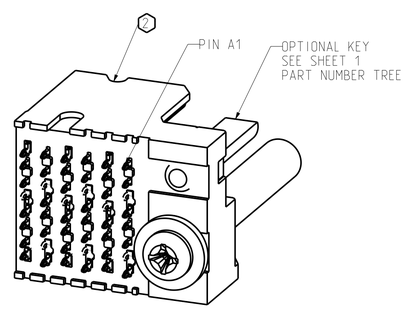

ISOMETRIC VIEW
SCALE 4/1

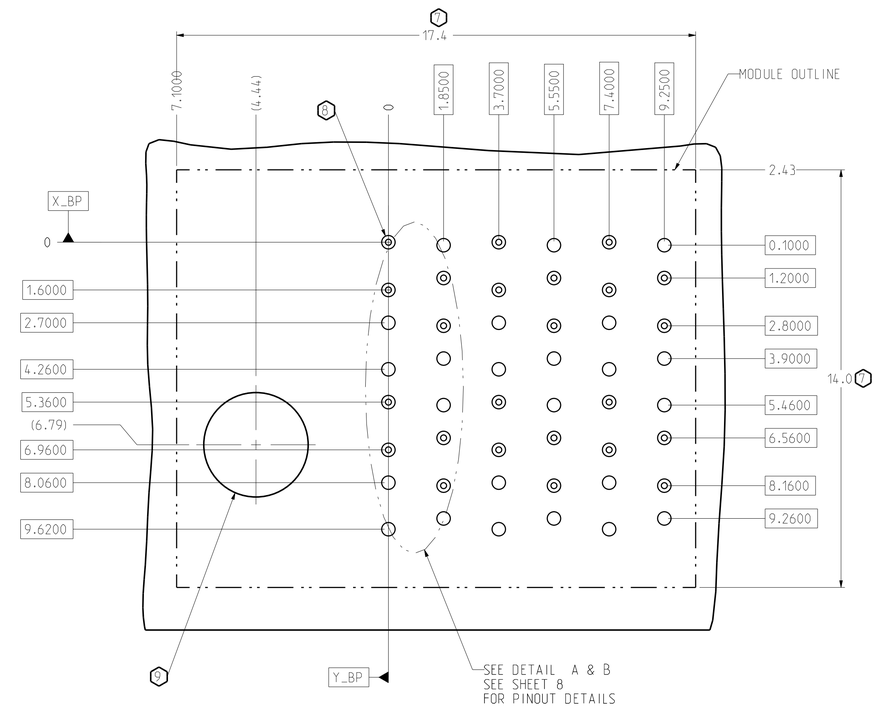

BP HOLE PATTERN
COMPONENT SIDE
SCALE 10/1

LEFT POLARIZING/GUIDE BACKPLANE FOOTPRINT

TOLERANCES	
0.0	±0.25
0.00	±0.13
0.000	± -
ANGLES	± 3°

UNLESS OTHERWISE SPECIFIED DIMENSIONS ARE IN MM. DECIMAL MARKER IS A PERIOD

DESIGN 01/08/2009 A.ASTBURY
DRAWN 10/22/2009 HCL-MH
CHK 10/22/2009 A.ASTBURY
APVD 10/22/2009 D.SMITH

Amphenol TCS
A Division of Amphenol Corporation
200 Innovative Way, Nashua, NH 03062 603.879.3000

TITLE BACKPLANE MODULES, VERTICAL MALE HEADER
XCede, 2 PAIR 6 POSITION

PART NO. SEE PN TREE SHEET 1 | REV N/A
DRAWING NO. C-951-200C-500 | REV D
ASSEM: C951-2-BP2 3.4
DRAWING: C951-200C-500 B.4

INTERPRET PER ASME Y14.5M

CUSTOMER USE DRAWING

CODE IDENT 31413 | SIZE D | SCALE 1/1 | SHEET 3 OF 8

DRW NO. C-951-200C-500 | SH 3 | REV D

ZONE	REV	SCR NUMBER	DESCRIPTION	BY	DATE	APPROVED
			SEE SHEET 1			

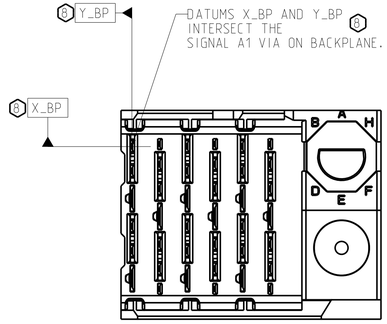

RIGHT POLARIZING/GUIDE BACKPLANE MODULE DIMENSION

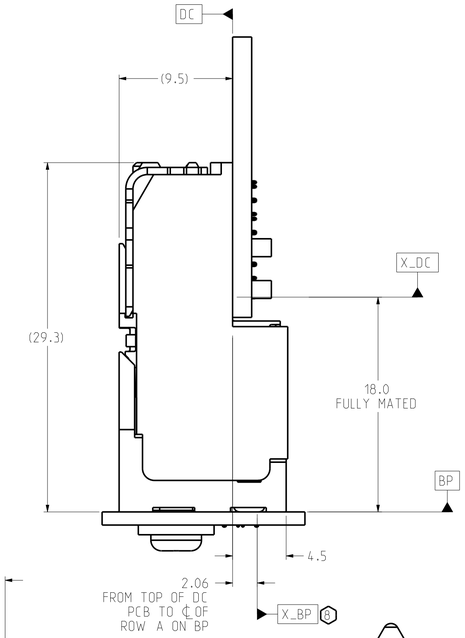

CONNECTOR REFERENCE
SCALE 4/1

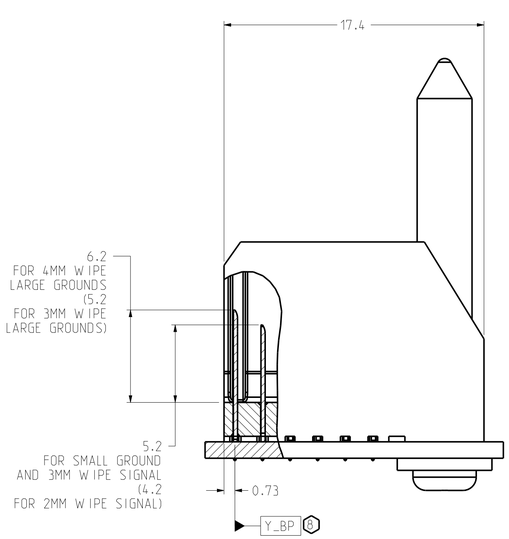

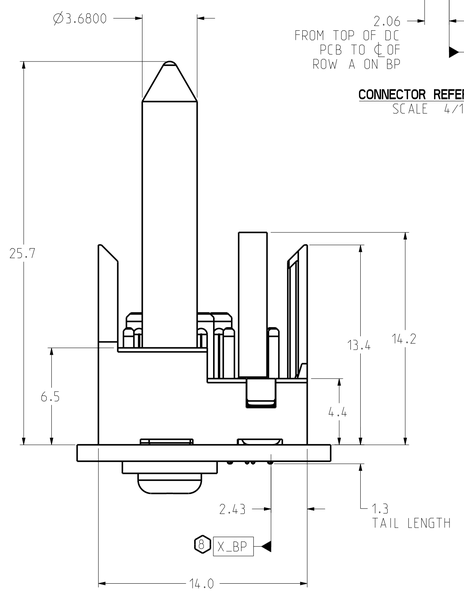

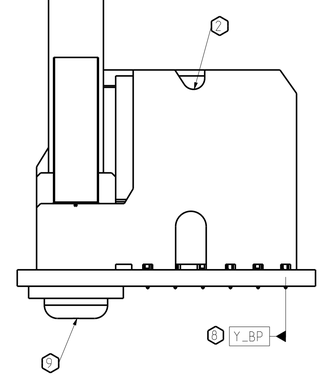

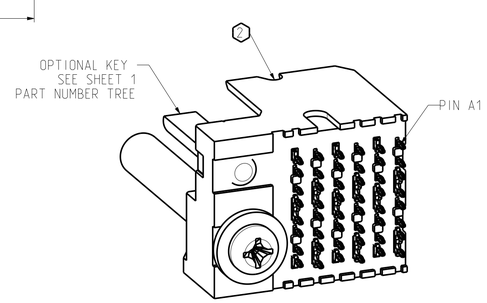

ISOMETRIC VIEW
SCALE 4/1

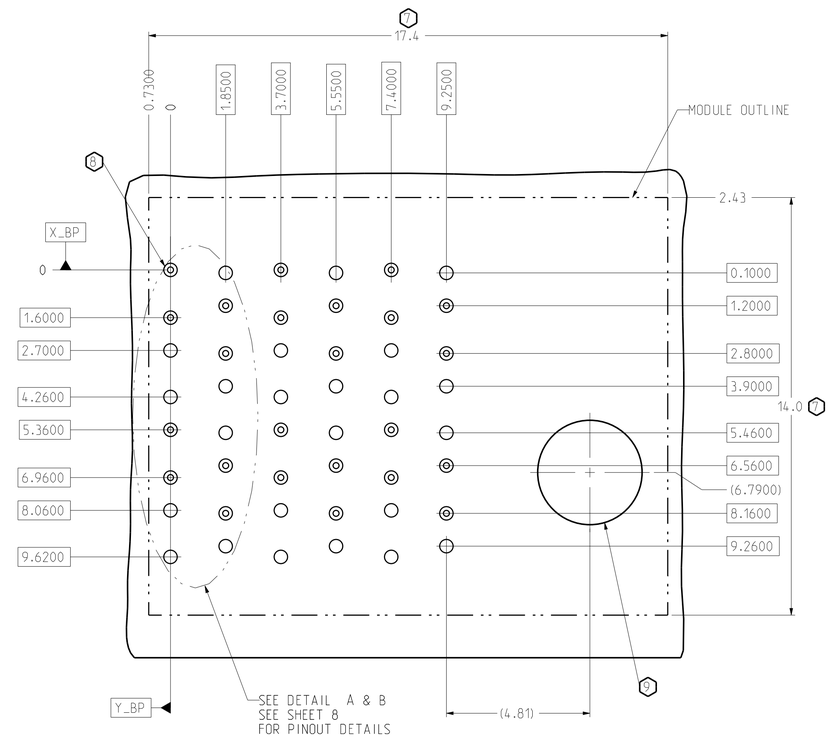

BP HOLE PATTERN
COMPONENT SIDE
SCALE 10/1

RIGHT POLARIZING/GUIDE BACKPLANE FOOTPRINT

TOLERANCES	
0.0	±0.25
0.00	±0.13
0.000	± -
ANGLES	± 3°

UNLESS OTHERWISE SPECIFIED DIMENSIONS ARE IN MM. DECIMAL MARKER IS A PERIOD

INTERPRET PER ASME Y14.5M

CODE IDENT 31413

CUSTOMER USE DRAWING

DESIGN 01/08/2009 A.ASTBURY
DRAWN 10/22/2009 HCL-MH
CHK 10/22/2009 A.ASTBURY
APVD 10/22/2009 D.SMITH

Amphenol TCS
A Division of Amphenol Corporation
200 Innovative Way, Nashua, NH 03062 603.879.3000

TITLE BACKPLANE MODULES, VERTICAL MALE HEADER
XCede, 2 PAIR 6 POSITION

PART NO. SEE PN TREE SHEET 1 | REV N/A
DRAWING NO. C-951-200C-500 | REV D
ASSEM: C951-2-BP2 3.4
DRAWING: C951-200C-500 B.4

SIZE D | SCALE 1/1 | SHEET 4 OF 8

DRW NO.	SH	REV
C-951-200C-500	5	D

ZONE	REV	SCR NUMBER	DESCRIPTION	BY	DATE	APPROVED
			SEE SHEET 1			

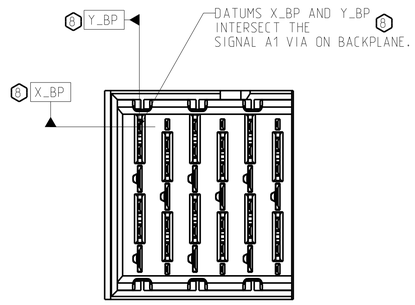

LEFT WALL BACKPLANE MODULE DIMENSION

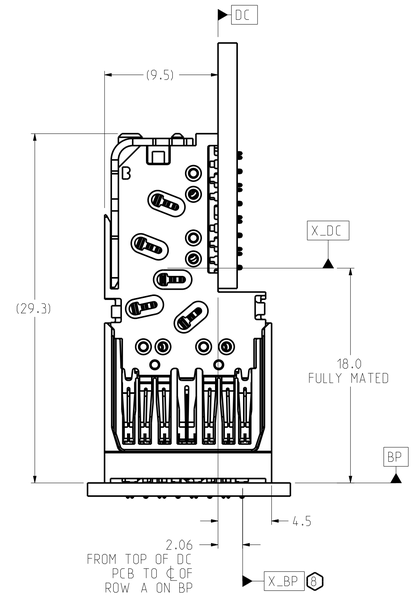

CONNECTOR REFERENCE
SCALE 4/1

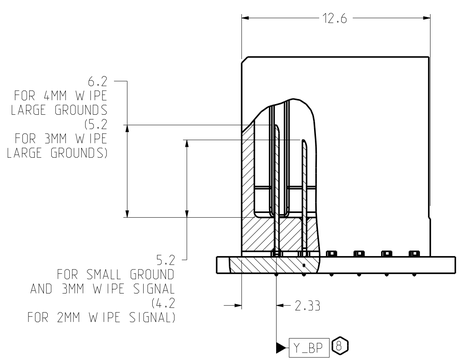

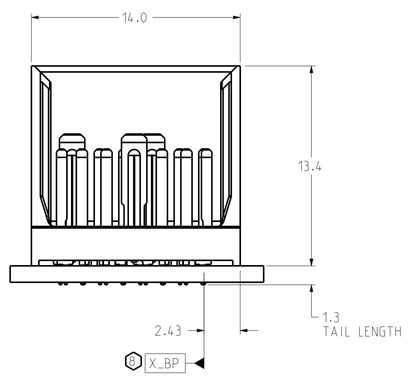

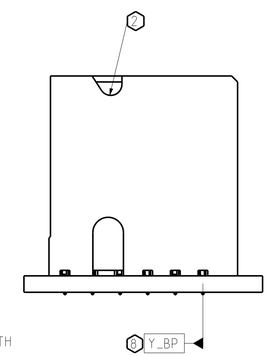

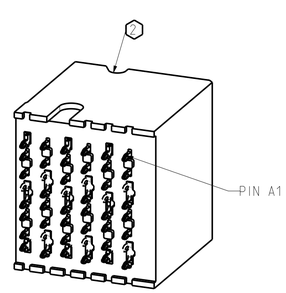

ISOMETRIC VIEW
SCALE 4/1

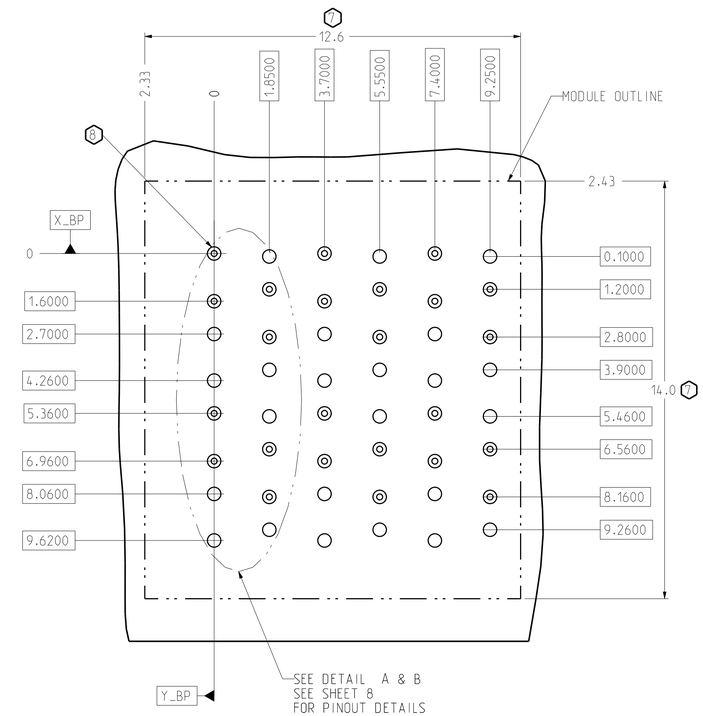

BP HOLE PATTERN
COMPONENT SIDE
SCALE 10/1

LEFT WALL BACKPLANE FOOTPRINT

TOLERANCES	
0.0	±0.25
0.00	±0.13
0.000	± -
ANGLES	± 3°

UNLESS OTHERWISE SPECIFIED DIMENSIONS ARE IN MM. DECIMAL MARKER IS A PERIOD

INTERPRET PER ASME Y14.5M

CODE IDENT 31413

CUSTOMER USE DRAWING

DESIGN 01/08/2009 A.ASTBURY
DRAWN 10/22/2009 HCL-MH
CHK 10/22/2009 A.ASTBURY
APVD 10/22/2009 D.SMITH

Amphenol TCS
A Division of Amphenol Corporation
200 Innovative Way, Nashua, NH 03062 603.879.3000

TITLE
BACKPLANE MODULES, VERTICAL MALE HEADER
XCede, 2 PAIR 6 POSITION

PART NO. SEE PN TREE SHEET 1 — REV N/A

DRAWING NO. C-951-200C-500 — REV D

ASSEM: C951-2-BP2 3.4
DRAWING: C951-200C-500 B.4

SIZE D | SCALE 1/1 | SHEET 5 OF 8

DRW NO. C-951-200C-500 | SH 5 | REV D

DRW NO.	SH	REV
C-951-200C-500	6	D

ZONE	REV	SCR NUMBER	DESCRIPTION	BY	DATE	APPROVED
			SEE SHEET 1			

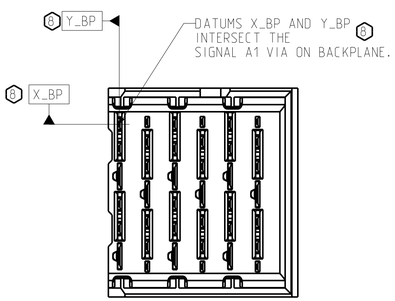

RIGHT WALL BACKPLANE MODULE DIMENSION

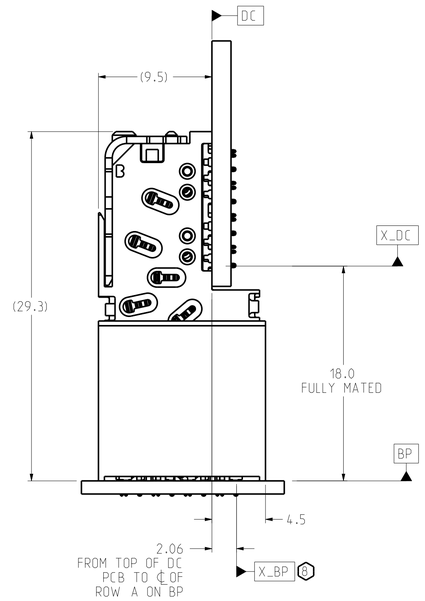

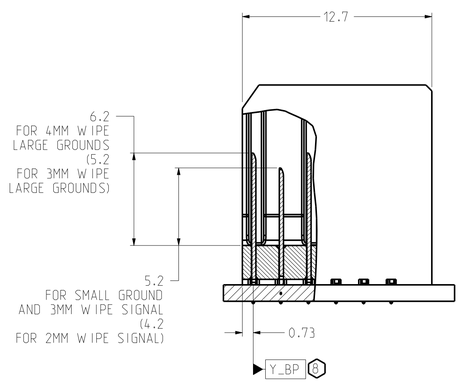

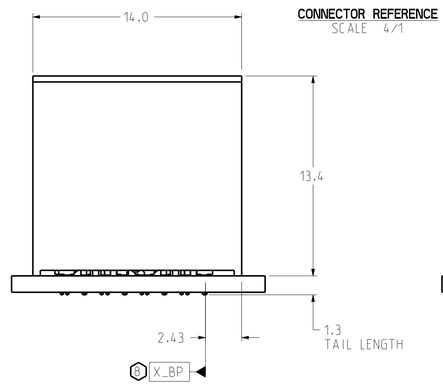

CONNECTOR REFERENCE
SCALE 4/1

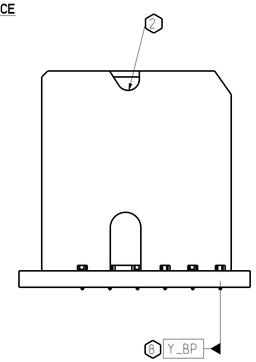

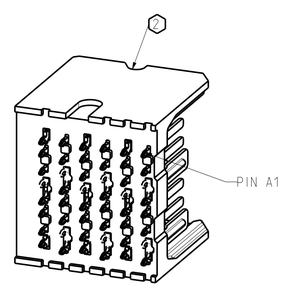

ISOMETRIC VIEW
SCALE 4/1

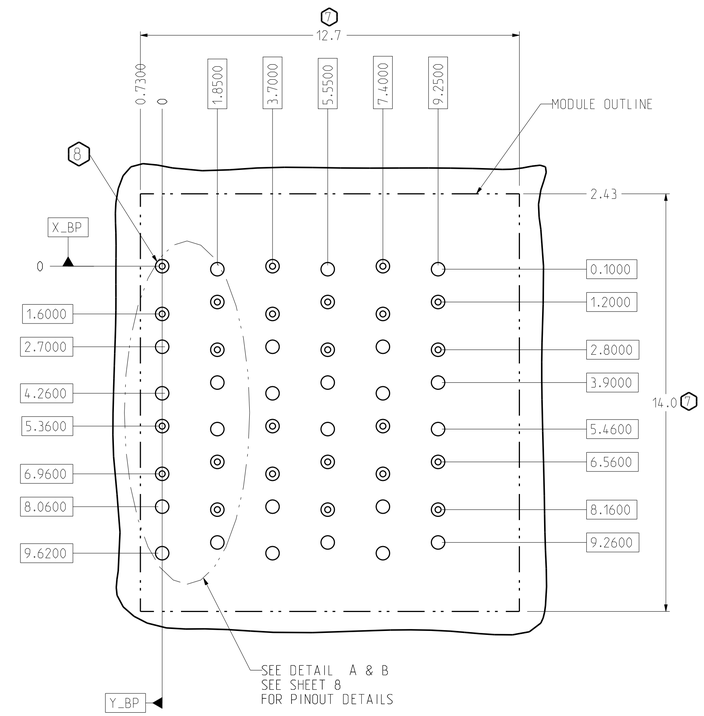

BP HOLE PATTERN
COMPONENT SIDE
SCALE 10/1

RIGHT WALL BACKPLANE FOOTPRINT

TOLERANCES	
0.0	±0.25
0.00	±0.13
0.000	± -
ANGLES	± 3°

UNLESS OTHERWISE SPECIFIED DIMENSIONS ARE IN MM. DECIMAL MARKER IS A PERIOD

DESIGN	01/08/2009	A.ASTBURY
DRAWN	10/22/2009	HCL-MH
CHK	10/22/2009	A.ASTBURY
APVD	10/22/2009	D.SMITH

Amphenol TCS
A Division of Amphenol Corporation
200 Innovative Way, Nashua, NH 03062 603.879.3000

TITLE
BACKPLANE MODULES, VERTICAL MALE HEADER
XCede, 2 PAIR 6 POSITION

PART NO. SEE PN TREE SHEET 1 — REV N/A

DRAWING NO. C-951-200C-500 — REV D

ASSEM: C951-2-BP2 3.4
DRAWING: C951-200C-500 B.4

INTERPRET PER ASME Y14.5M

CUSTOMER USE DRAWING

CODE IDENT 31413

SIZE D | SCALE 1/1 | SHEET 6 OF 8

DRW NO. C-951-200C-500 | SH 6 | REV D

DRW NO.	SH	REV
C-951-200C-500	7	D

ZONE	REV	SCR NUMBER	DESCRIPTION	BY	DATE	APPROVED
			SEE SHEET 1			

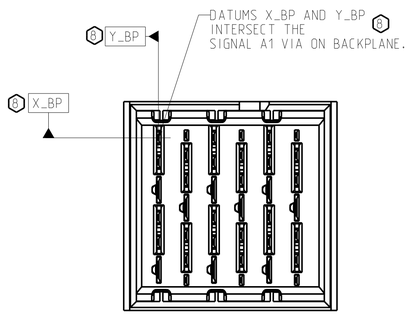

TWO WALL BACKPLANE MODULE DIMENSION

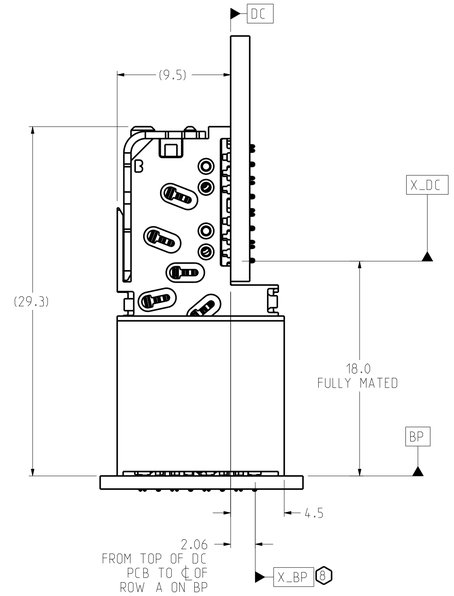

CONNECTOR REFERENCE
SCALE 4/1

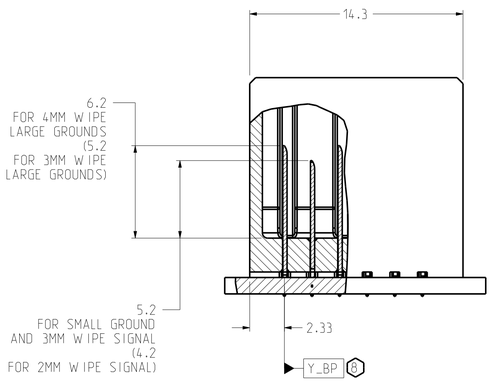

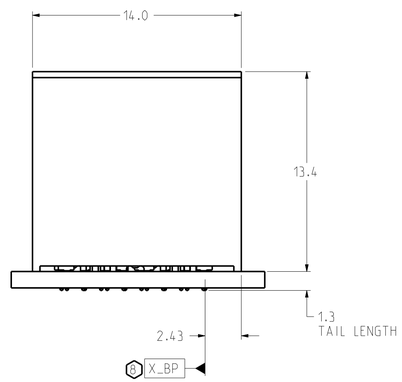

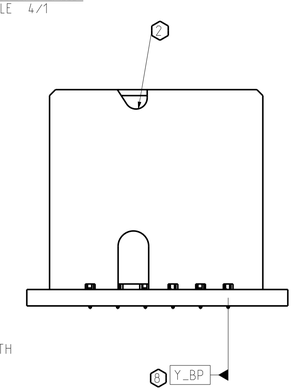

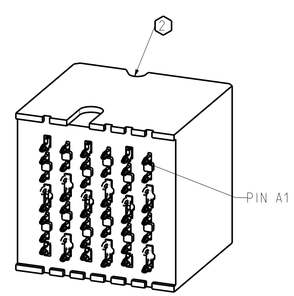

ISOMETRIC VIEW
SCALE 4/1

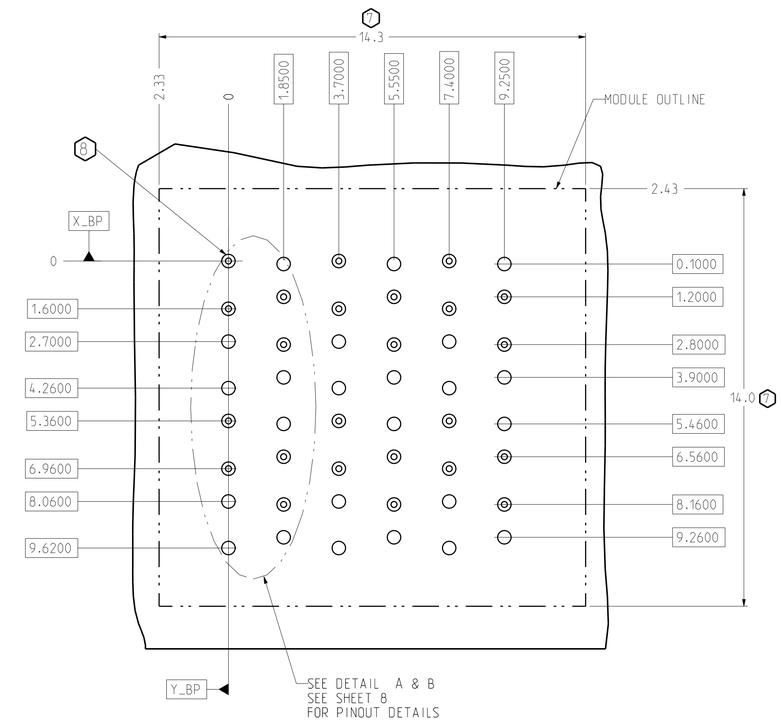

BP HOLE PATTERN
COMPONENT SIDE
SCALE 10/1

TWO WALL BACKPLANE FOOTPRINT

TOLERANCES	
0.0	±0.25
0.00	±0.13
0.000	± -
ANGLES	± 3°

UNLESS OTHERWISE SPECIFIED DIMENSIONS ARE IN MM. DECIMAL MARKER IS A PERIOD

INTERPRET PER ASME Y14.5M

CODE IDENT 31413

CUSTOMER USE DRAWING

DESIGN 01/08/2009 A.ASTBURY
DRAWN 10/22/2009 HCL-MH
CHK 10/22/2009 A.ASTBURY
APVD 10/22/2009 D.SMITH

Amphenol TCS
A Division of Amphenol Corporation
200 Innovative Way, Nashua, NH 03062 603.879.3000

TITLE
BACKPLANE MODULES, VERTICAL MALE HEADER
XCede, 2 PAIR 6 POSITION

PART NO.	REV
SEE PN TREE SHEET 1	N/A
DRAWING NO. C-951-200C-500	D

ASSEM: C951-2-BP2 3.4
DRAWING: C951-200C-500 B.4

SIZE D | SCALE 1/1 | SHEET 7 OF 8

DRW NO. C-951-200C-500 | SH 7 | REV D

DRW NO.	SH	REV
C-951-200C-500	8	D

ZONE	REV	SCR NUMBER	DESCRIPTION	BY	DATE	APPROVED
			SEE SHEET 1			

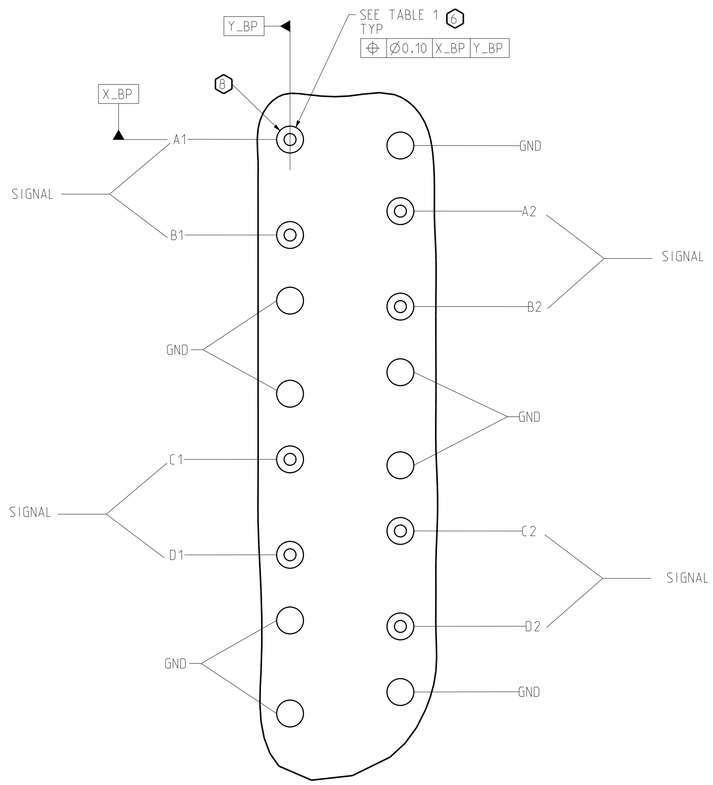

DETAIL A
HSD PINOUTS
SCALE 20/1

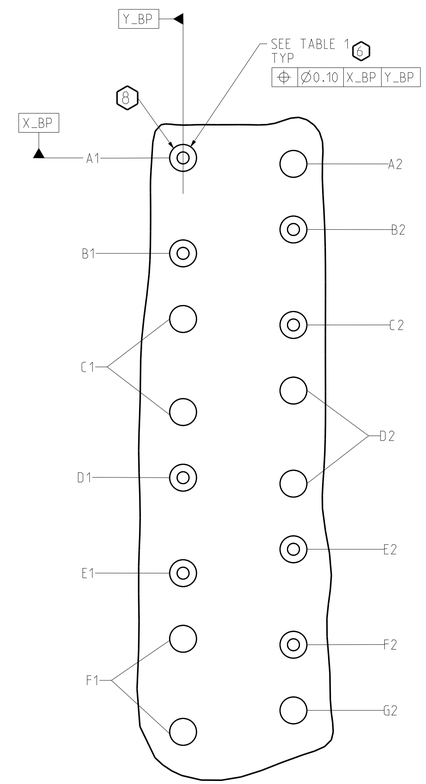

DETAIL B
LC PINOUTS
SCALE 20/1

TABLE 1 6

	COMPLIANT PIN DRILL Ø0.0217"	COMPLIANT PIN DRILL Ø0.0177"
PTH	Ø0.45±0.05	Ø0.36±0.05
DRILL	Ø0.55 [0.0217"]	Ø0.45 [0.0177"]
PAD	Ø0.85	Ø0.75

TOLERANCES	
0.0	±0.25
0.00	±0.13
0.000	± -
ANGLES	± 3°

UNLESS OTHERWISE SPECIFIED DIMENSIONS ARE IN MM. DECIMAL MARKER IS A PERIOD

INTERPRET PER ASME Y14.5M

CODE IDENT 31413

CUSTOMER USE DRAWING

DESIGN 01/08/2009 A.ASTBURY
DRAWN 10/22/2009 HCL-MH
CHK 10/22/2009 A.ASTBURY
APVD 10/22/2009 D.SMITH

Amphenol TCS
A Division of Amphenol Corporation
200 Innovative Way, Nashua, NH 03062 603.879.3000

TITLE BACKPLANE MODULES, VERTICAL MALE HEADER
XCede, 2 PAIR 6 POSITION

PART NO. SEE PN TREE SHEET 1 REV N/A
DRAWING NO. C-951-200C-500 REV D
ASSEM: C951-2-BP2 3.4
DRAWING: C951-200C-500 B.4

SIZE D SCALE 4/1 SHEET 8 OF 8

DRW NO. C-951-200C-500 SH 8 REV D