NOTES:

1. MATERIALS AND FINISHES:
   BODY - BRASS, NICKEL PLATING
   CONTACT - BeCu, GOLD PLATING
   INSULATOR - PTFE, NATURAL
   COUPLING NUT - BRASS, NICKEL PLATING
   RETAINING RING - STAINLESS STEEL, NATURAL

2. ELECTRICAL:
   A. IMPEDANCE: 75 OHM
   B. FREQUENCY RANGE: DC-12 GHz
   C. VSWR(RETURN LOSS): -30 dB DC-6 GHz MAX.
   -25 dB 6-12 GHz MAX.
   D. DIELECTRIC WITHSTANDING VOLTAGE: 500 VRMS, MIN.

3. MECHANICAL:
   A. DURABILITY: 500 CYCLES MIN.
   B. TEMPERATURE RANGE: -65° C TO 165° C

4. PACKAGING:
   A. QUANTITY: SINGLE PACK
   B. MARKING: PACKAGING TO BE MARKED
   "AMPHENOL RF, AD-NPHDBNCJ-1, AND DATE CODE"

THIRD ANGLE PROJ.

REVISIONS				
REV	DESCRIPTION	DATE	ECN	APPR
A	RELEASE TO MANUFACTURING	12-Aug-19	12542	CJV

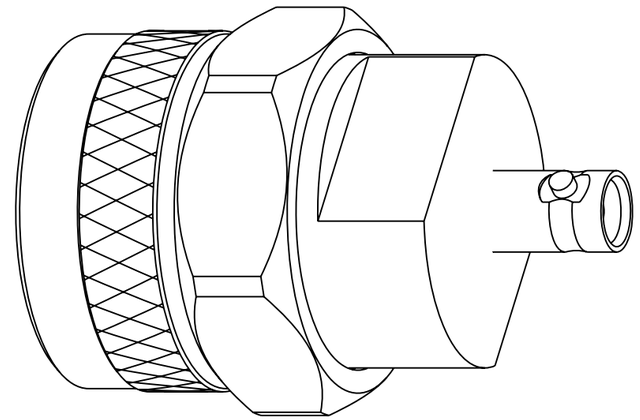

SCALE 3.000

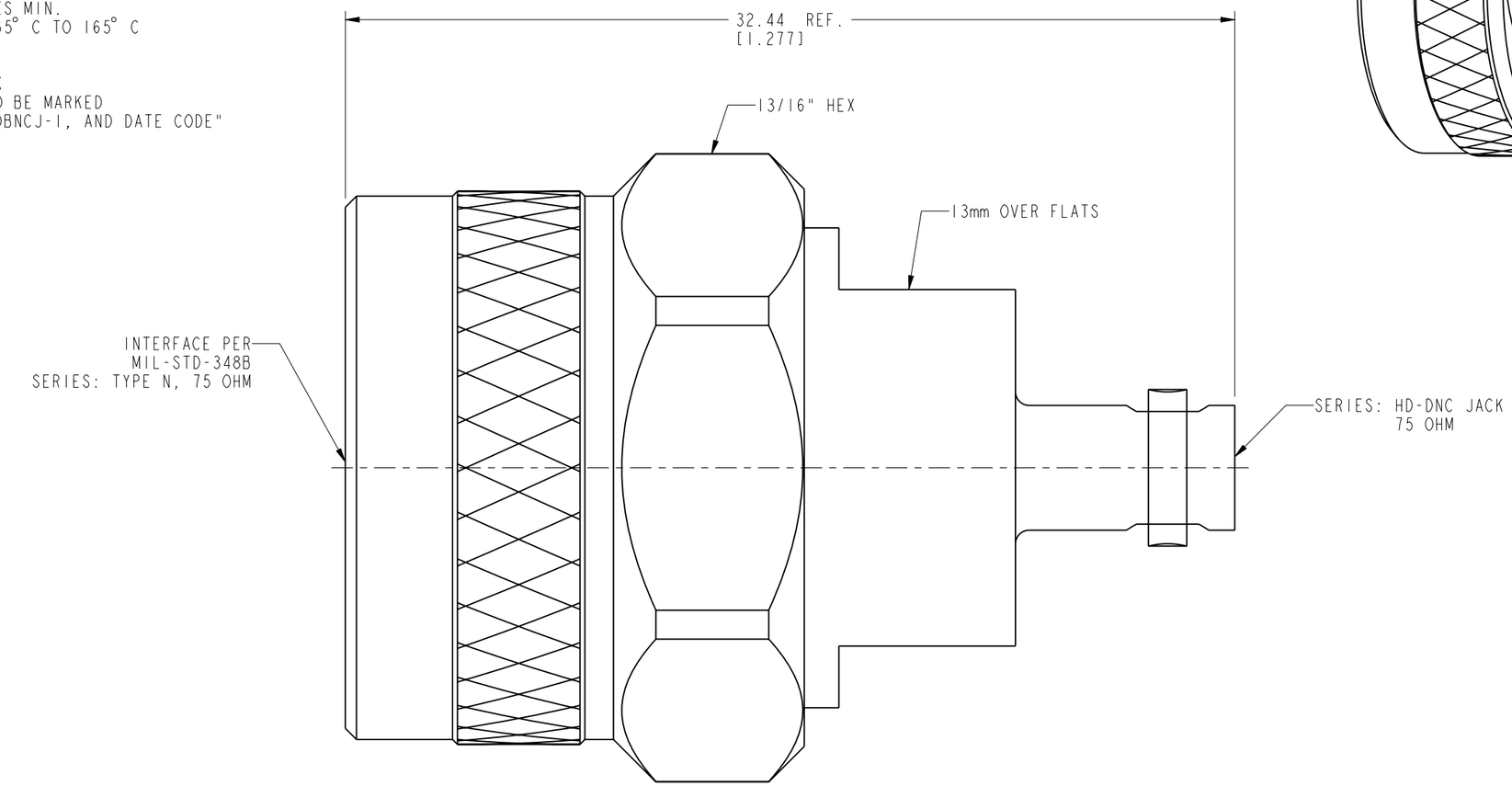

CUSTOMER OUTLINE DRAWING

ALL OTHER SHEETS ARE FOR INTERNAL USE ONLY

UNLESS OTHERWISE SPECIFIED, DIMENSIONS ARE IN METRIC AND TOLERANCES ARE:

<0.5mm	0.5 - 6mm	6 - 30mm	30 - 120mm	ANGLES
± 0.05mm	±0.1mm	±0.2mm	± 0.3mm	±1°

NOTICE - These drawings, specifications, or other data (1) are, and remain the property of Amphenol corp. (2) must be returned upon request; and (3) are confidential and not to be disclosed to any person other than those to whom they are given by Amphenol Corp. the furnishing of these drawings, specifications, or other data by Amphenol Corp., or to any other person to anyone for any purpose is not to be regarded by implication or otherwise in any manner licensing, granting rights to permitting such holder or any other person to manufacture, use or sell any product, process or design, patented or otherwise, that may in any way be related to or disclosed by said drawings, specifications, or other data.

MATERIAL
SEE NOTES

REFERENCE
EAR# 8729
REF: ---

CONFIGURATION LEVEL: In Work

FINISH

DRAWN	S.DUAN	DATE 14-Aug-19
ENGINEER	C. VIGORITO	DATE 02-Apr-19
APPROVED	S.HSIEH	DATE 16-Aug-19
CAD FILE		

TITLE
ADAPTER
N PLUG TO HD-BNC JACK
75 OHM

SCALE: 5.0:1.0 | SHEET 2 OF 2

DWG SIZE: B | REV: A

Amphenol RF
www.amphenolrf.com

DRAWING NO. AD-NPHDBNCJ-1
ITEM NO. AD-NPHDBNCJ-1
PART NO. AD-NPHDBNCJ-1