APPROVED: _____

DATE: _____ TITLE: _____

Rev	AWO #	Description	Date	Appr
-		RELEASED	12/30/05	
A		ADDED DIM.	11/3/11	
B		ADDED DIM. & SHAPE	6/6/12	

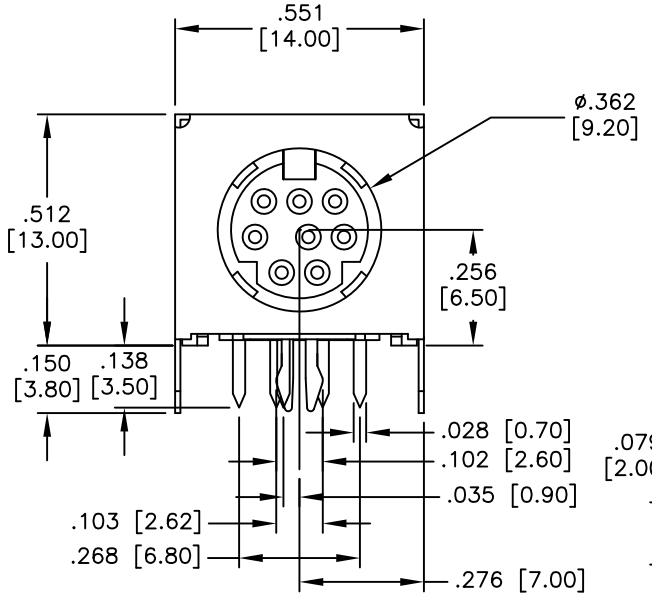

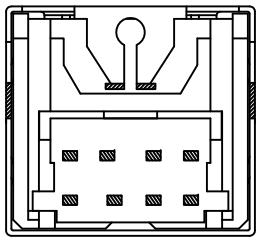

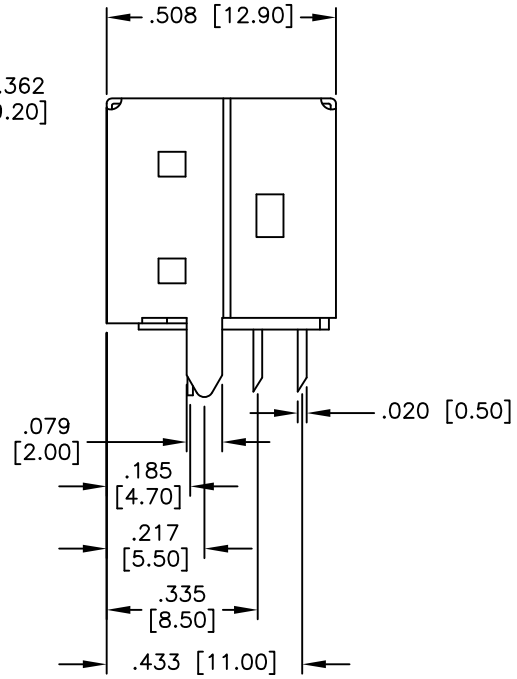

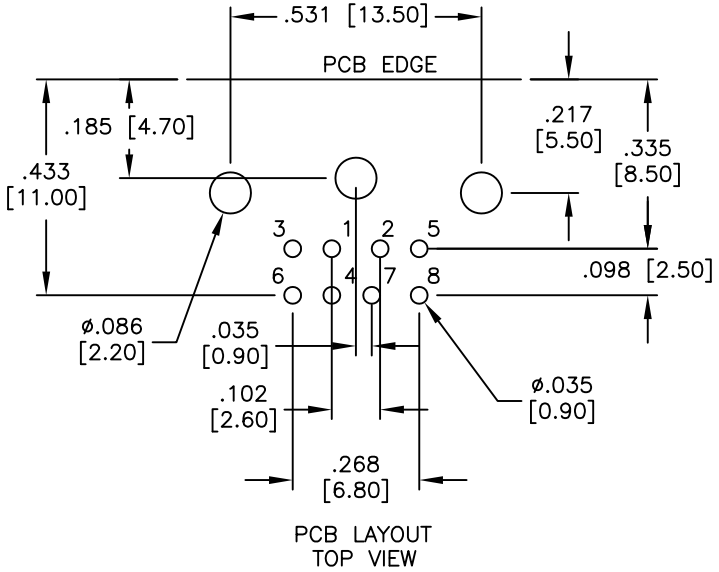

PCB LAYOUT
TOP VIEW

MATING FACE CONFIGURATIONS

MDJ–003–FS	MDJ–004–FS	MDJ–005–FS	MDJ–006–FS	MDJ–007–FS	MDJ–008–FS

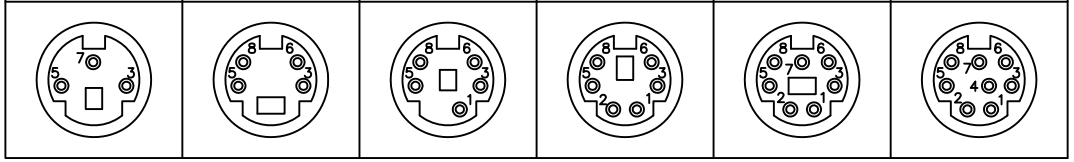

SPECIFICATIONS:
Material:
Insulator: PBT, glass filled, rated UL 94V–0
Insulator color: Black
Contacts: Phosphor Bronze
Shield: Copper Alloy, Tin plated
Plating:
Gold over Nickel underplate on contact area,
Tin over Copper underplate on tails
Electrical:
Operating voltage: 100 VAC/12 VDC max.
Current rating: 1 Amp max./2 Amps max.
Contact resistance: 30 mohms max. initial
Insulation resistance: 100 Mohms min.
Dielectric withstanding voltage: 250 VAC for 1 minute
Temperature Rating:
Operating temperature: –25°C to +70°C
Environmental:
Lead free, RoHS compliant.

RoHS COMPLIANT

UNLESS OTHERWISE SPECIFIED
ALL DIMENSIONS ARE INCHES [MM]
TOLERANCES: EXCEPT AS NOTED

INCHES		HOLES	
.X	± .10	Ø.X	±.10
.XX	± .020	Ø.XX	±.015
.XXX	± .015	Ø.XXX	±.010

APPROVALS		DATE
DRAWN	SS	12/30/05
CHECKED		
APPROVED		

ADAM TECH
909 Rahway Avenue, Union, NJ 07083
Phone: 908-687-5000 Fax: 908-687-5710

TITLE
MINI DIN JACK, RIGHT ANGLE, FULL SHIELD

SIZE	PART NO.	REV.
X	MDJ-00X-FS	B

REF: S00095T | SCALE: NTS | SHEET 1 OF 1