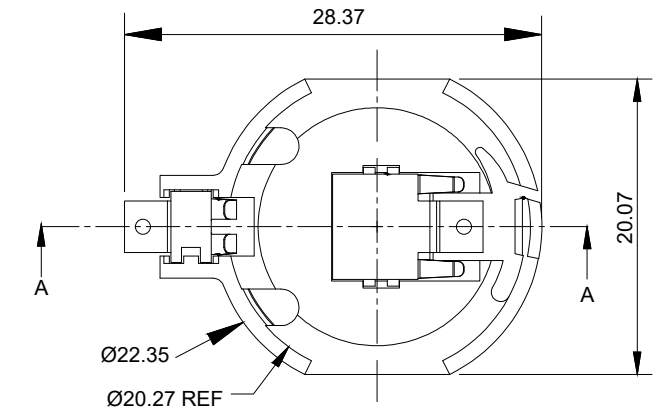

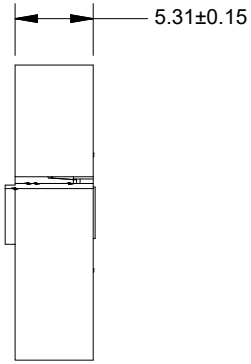

Pad Layout

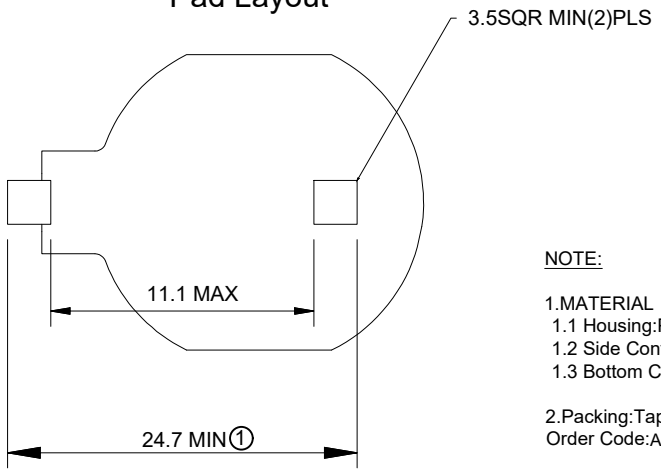

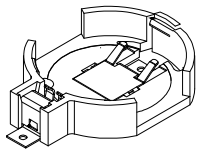

NOTE:

1.MATERIAL
1.1 Housing:PA9T,Black
1.2 Side Contact:C5191-EH,Au or Tin over Nickel
1.3 Bottom Contact:SUS301-EH,Au or Tin over Nickel

2.Packing:Tape & Reel
Order Code:A-BAT-CH-C8-EG-xSR7
G:Gold Flash
Z:Tin

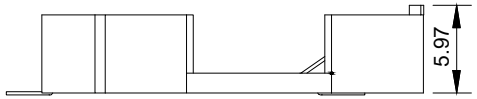

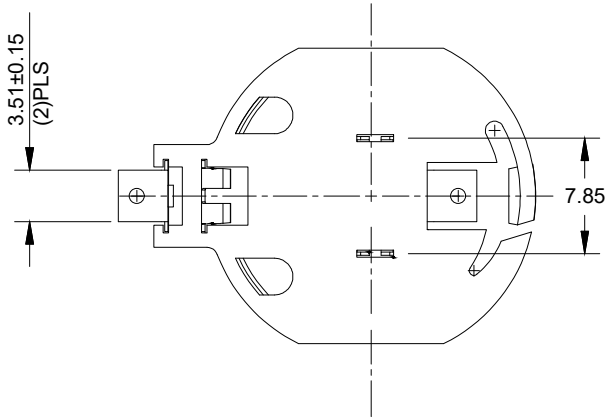

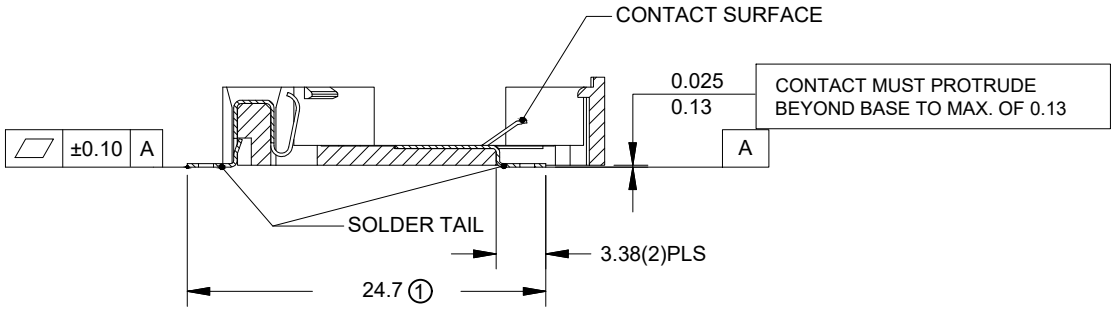

SECTION A-A

RoHS compliant

unit:mm

Scale	Free
TOLERANCE	
X.	±0.35
.X	±0.25
.XX	±0.20
.XXX	±0.15
DIM	TOL
Angle	TOL

Id.	modification	Date	Name
①	Update dimension	17.07.2022	Daniel
⓪	Drawn	12.20.2021	Peter

	Date	Name
Drawn	12.20.2021	Peter
Approved	17.07.2022	Daniel

ASSMANN WSW components

Description: Coin Cell Holders CR2032 Type

ASSMANN WSW-NO.
A-BAT-CH-C8-EG-xSR7

Drawing-No.
ASS 9164 CO

rev01

Customer-No.

SHEET 1 / 2

SV5043

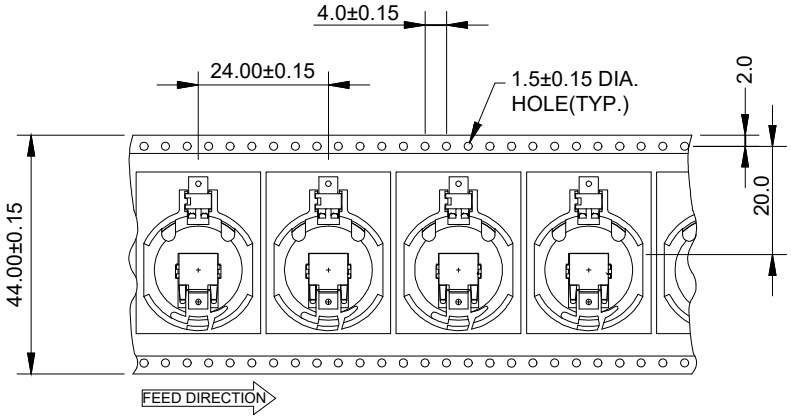

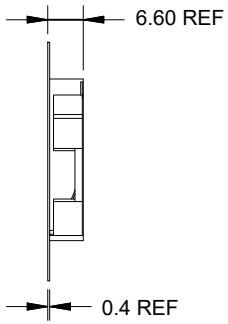

NOTE:

Tape and Reel Specification:
1.Tape:MATL-ALL Conductive Polystyrene Carrier
ANSI/EIA-481 Standard
44.0 Wide;24.0 Pitch
2.Reel:330.2 DIA. 400Pieces Per Reel.

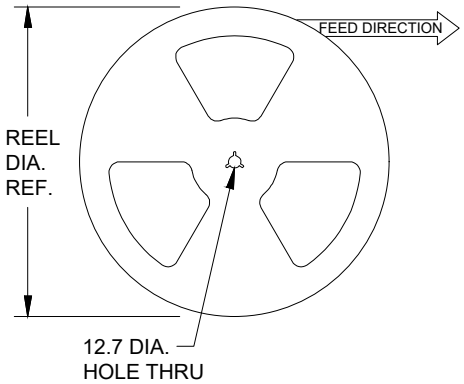

Scale	Free						Date	Name	Description: Coin Cell Holder Packing Method
TOLERANCE						Drawn	12.20.2021	Peter	
X.	±0.35					Approved	17.07.2022	Daniel	ASSMANN WSW-NO.
.X	±0.25								A-BAT-CH-C8-EG-xSR7
.XX	±0.20								
.XXX	±0.15	1	Update dimension	17.07.2022	Daniel	ASSMANN WSW components			Drawing-No. ASS 9164 CO rev01
DIM	TOL	0	Drawn	12.20.2021	Peter				
		Id.	modification	Date	Name				Customer-No. SHEET 2 / 2
Angle	TOL								

SV5043