Rev	AWO #	Description	Date	Appr
-		RELEASED	8/11/16	

APPROVED: _____

DATE: _____ TITLE: _____

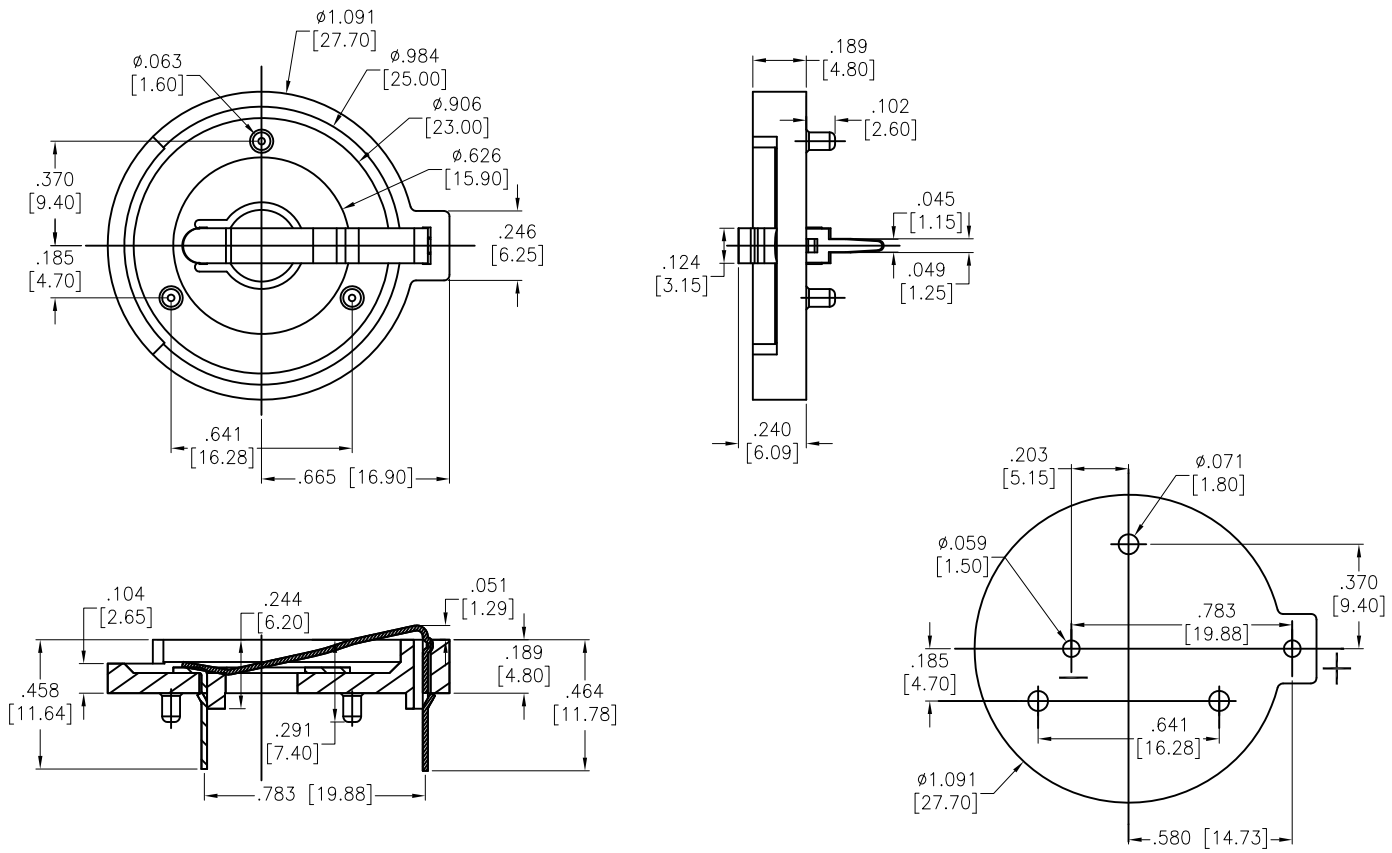

RECOMMENDED PCB LAYOUT

SPECIFICATIONS:
Material:
Housing: PBT, Glass reinforced, rated UL94V-0, Color: Black
Contact: Mn Steel, Nickel plated
Electrical:
Contact resistance: 30 mohms max
Insulation resistance: 1,000 Mohms min
Dielectric Voltage: 500 VAC one sec level
Temperature Rating:
Operating temperature: -25°C to +85°C.
Environmental:
Lead free, RoHS compliant

RoHS COMPLIANT

UNLESS OTHERWISE SPECIFIED
ALL DIMENSIONS ARE INCHES [MM]
TOLERANCES: EXCEPT AS NOTED

INCHES		HOLES	
.X	± .10	Ø.X	±.10
.XX	± .020	Ø.XX	±.015
.XXX	± .015	Ø.XXX	±.010

APPROVALS		DATE
DRAWN	HR	8/11/16
CHECKED	LW	8/11/16
APPROVED		

ADAM TECH
909 Rahway Avenue, Union, NJ 07083
Phone: 908-687-5000 Fax: 908-687-5710

TITLE: BATTERY HOLDER, PCB THRU HOLE FOR CR2430, BLACK COLOR

SIZE	PART NO.	REV.
X	BH-28A-1	-

REF: S00136C | SCALE: NTS | SHEET 1 OF 1