Rev	AWO #	Description	Date	Appr
-		RELEASED	3/20/20	

APPROVED: _____

DATE: _____ TITLE: _____

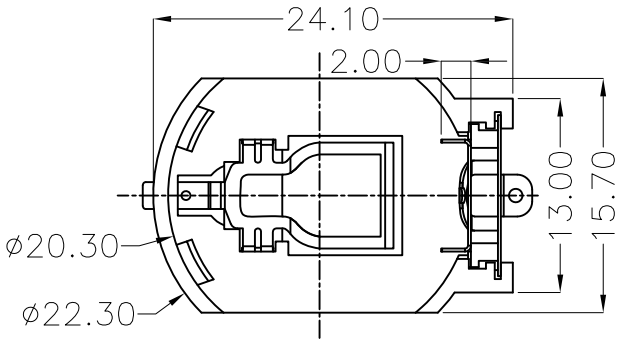

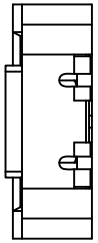

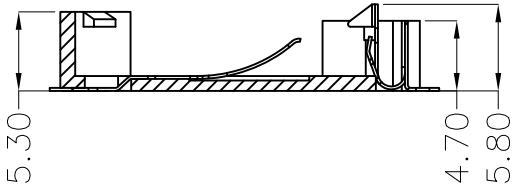

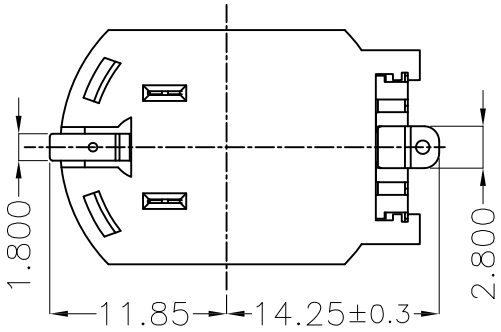

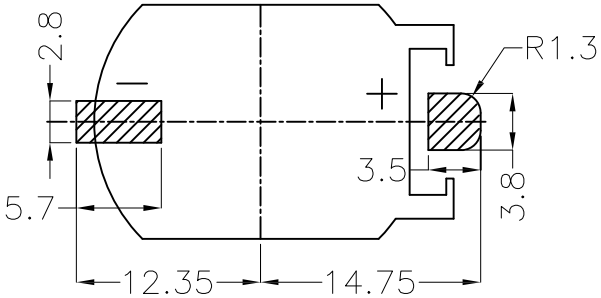

RECOMMENDED PCB LAYOUT

SPECIFICATIONS:
Material:
Housing: Hi–temp thermoplastic, Color: Brown
Contact: Phosphor Bronze, Tin plated
Electrical:
Contact resistance: 30 mohms max
Insulation resistance: 1,000 Megaohms ohms min
Dielectric Voltage: 500 VAC one sec level
Temperature Rating:
Operating temperature: −25˚C to +85˚C
Environmental:
Lead free, RoHS compliant

RoHS COMPLIANT

UNLESS OTHERWISE SPECIFIED
ALL DIMENSIONS ARE MILLIMETERS
TOLERANCES: EXCEPT AS NOTED

MM		ANGLE	
X	± 0.30	X	± 1˚
X.X	± 0.25	X.X	± 0.5˚
X.XX	± 0.20		
X.XXX	± 0.10		

APPROVALS		DATE
DRAWN	LH	3/20/20
CHECKED	MY	3/20/20
APPROVED		

ADAM TECH INTERCONNECTS
909 Rahway Avenue,
Union, NJ 07083
Phone: 908-687-5000
Fax: 908-687-5710

TITLE
BATTERY HOLDER, SURFACE MOUNT, FOR CR2032, BROWN COLOR

SIZE	PART NO.	REV.
X	BH-74N-5	-

REF: S00136C | SCALE: NTS | SHEET 1 OF 1