MOUNTING HOLE AND SOLDER PAD CONFIGURATION

SCALE 4 : 1 TOLERANCE ±.005

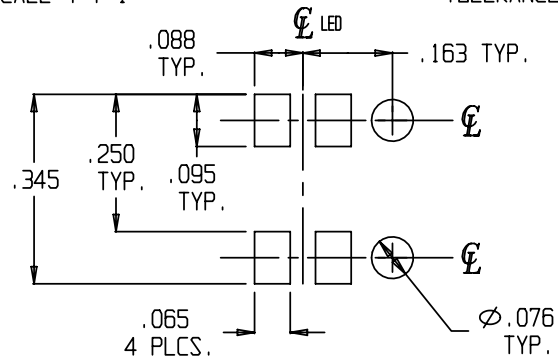

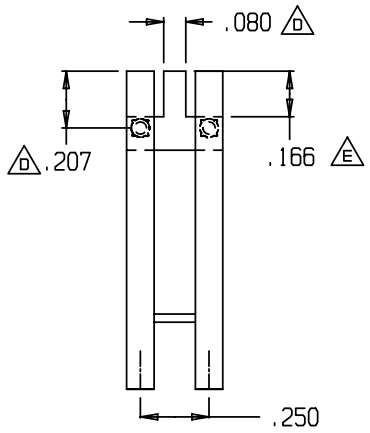

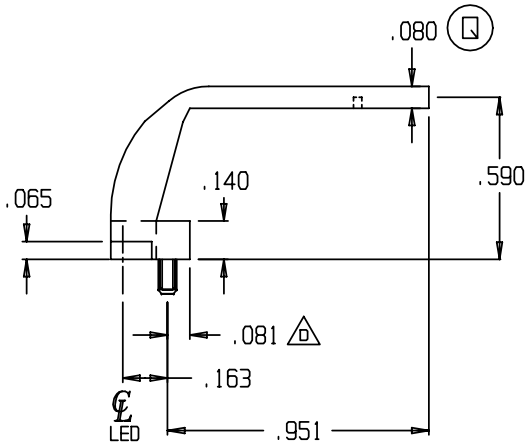

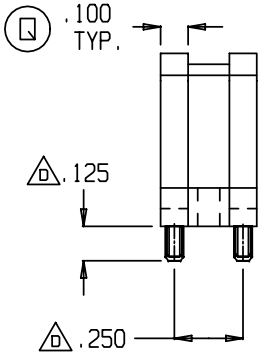

REV	ECR NO./DESCRIPTION	DATE
A	11943 NEW RELEASE	07/26/95
B	11995 PAP	08/14/95
C	12169 MV REDESIGN	09/18/95
D	12507 MV CREATE SALES DRAWING	12/12/95
E	12606 MV ELIMINATED INTERIOR ANGLE	01/05/96

NOTES:

1. ALL DIMENSIONS ARE IN INCHES.
2. (D) PART DESIGNED TO BE USED WITH IDI 7016X SERIES SURFACE MOUNT LEDS.

DO NOT SCALE

THIS DWG IS THE PROPERTY OF INDUSTRIAL DEVICES, INC. AND IS PROPRIETARY IN GENERAL AND IN DETAIL. IT SHALL NOT BE COPIED OR ITS CONTENTS REVEALED TO OUTSIDE PARTIES WITHOUT THE WRITTEN CONSENT OF INDUSTRIAL DEVICES, INC.

(Q) FOR INSPECTION USE ONLY
(X) SPC DOCUMENTATION REQ. (X R CHARTS)

DIST. S

PART NO.

MODEL NO. 7511A22

MOLD NO.

MATERIAL: POLYCARBONATE CLEAR

FINISH:

TOLERANCE UNLESS OTHERWISE SPECIFIED:
FRACTION ± 1/64
INCHES .xxx ±.010 (0.25)
ANGLE ± 1 deg.

TITLE: DUAL POSITION LIGHTPIPE

INDUSTRIAL DEVICES INC.
A CHICAGO MINIATURE COMPANY
260 RAILROAD AVE. HACKENSACK, NJ 07601

DRAWN M. VALZANIA
CHECKED
ENG. APPRV

SCALE: 2 : 1

B12814 REV E

DWG NO.

SHEET