REV	ECN NO	REVISIONS	DRN	CKD	APP	DATE
A	——	NEW RELEASE	KLJ			9/3/08

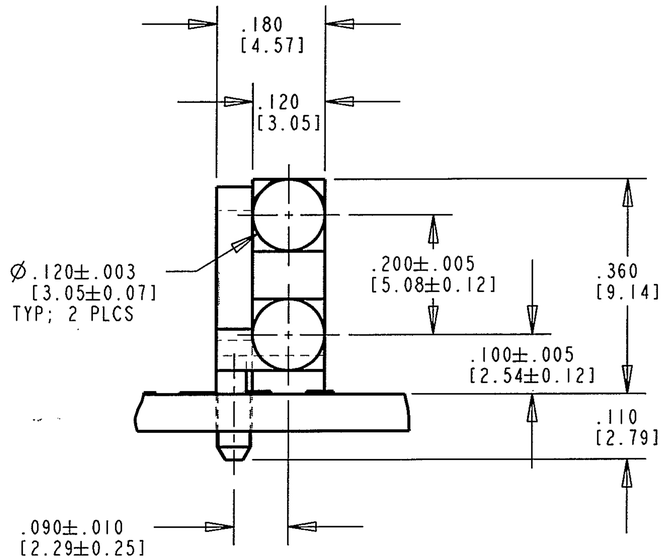

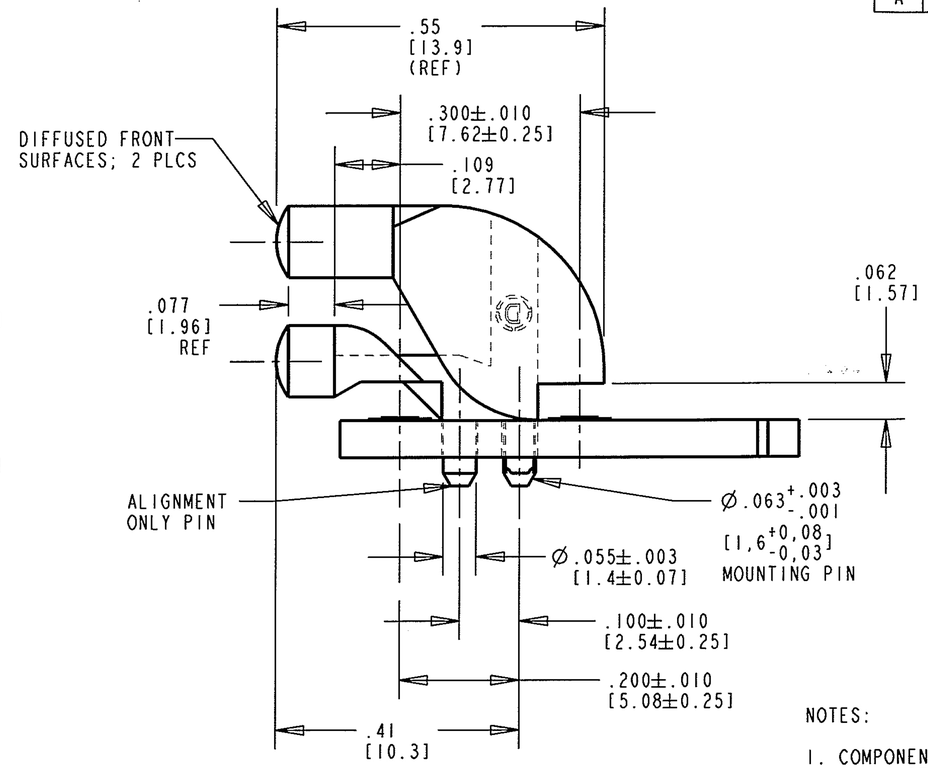

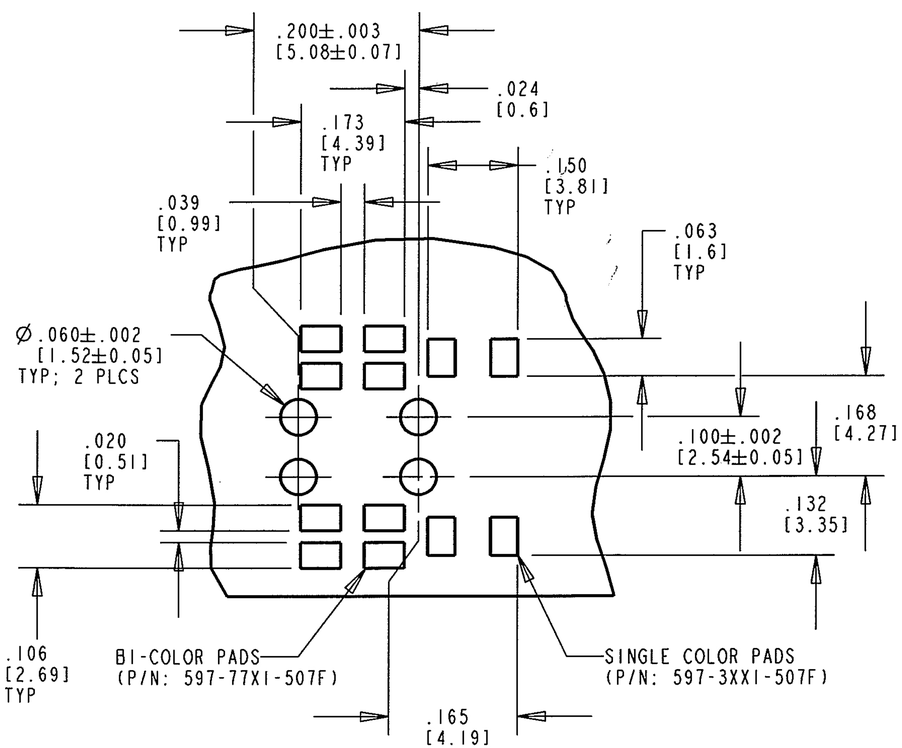

SOLDER PAD/HOLES LAYOUT

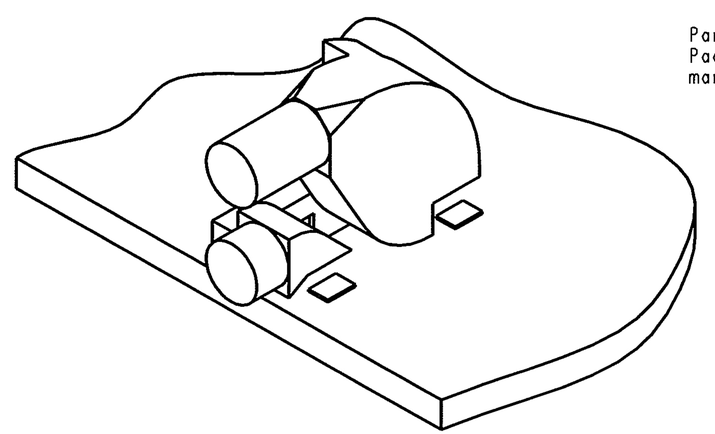

NOTES:

1. COMPONENTS TO BE MOLDED IN A CLEAR TRANSMISSIVE POLYCARBONATE (UL 94V-0 FLAMMABILITY).
2. MINIMUM ALLOWABLE PITCH IS .200 FOR EITHER BI-COLOR OR SINGLE.
3. COMPONENTS DESIGNED TO BE PRESSED INTO P.C. BOARD.
4. OPERATING/STORAGE TEMPERATURE: -30°C TO +100°C
5. RECOMMENDED LIGHT SOURCES: SINGLE OR BI-COLOR SMT LEDS (DIALIGHT P/N'S: 597-3XXI-50XF, 597-77XI-50XF)
6. DIALIGHT PART NUMBER: 515-1061F

RoHS COMPLIANT 515-1061F

Part Numbers with the "F" suffix ending are RoHS Compliant. Packaging is marked with "RoHS Compliant" label or equivalent markings.

THIS DRAWING AND THE CONTENTS HEREIN ARE CONFIDENTIAL AND THE SOLE PROPERTY OF DIALIGHT. REPRODUCTION OF THIS DRAWING OR CONSTRUCTION OF ANY PARTS WITHIN THIS DRAWING ARE FORBIDDEN WITHOUT THE WRITTEN CONSENT OF DIALIGHT.

SCALE: DRAWING SCALE

ALL DIM'S IN: INCHES (MM)

TOLERANCES:
UNLESS OTHERWISE SPECIFIED
FRACTIONS: ±1/64
DECIMALS (.XX): ±.02
DECIMALS (.XXX): ±.015
DECIMALS (.XXXX): ±.0005
ANGLES: ±3°

FINISH:

FSCM 83330

DRAWING NUMBER: C-17655

REV: A

TITLE: BI-LEVEL LIGHT PIPE RoHS COMPLIANT

MATERIAL

Dialight

1501 ROUTE 34 SOUTH
FARMINGDALE, NJ 07727

SHEET 1 OF 1

FAMILY TABLE: