REVISIONS			
REV	DESCRIPTION	DATE	BY

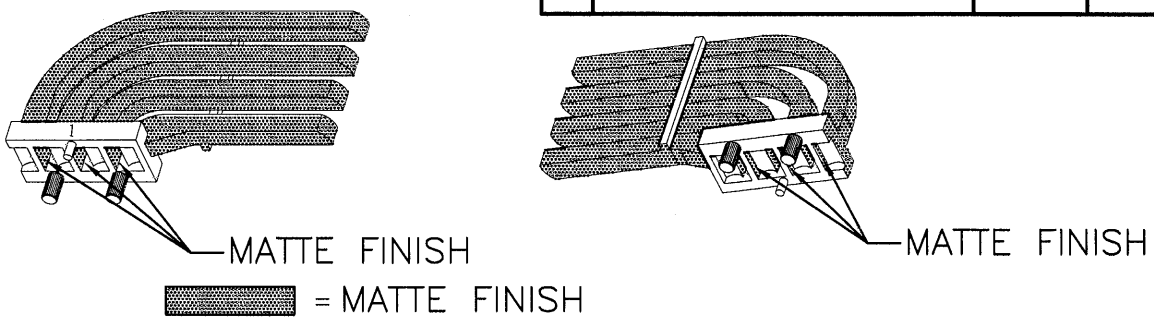

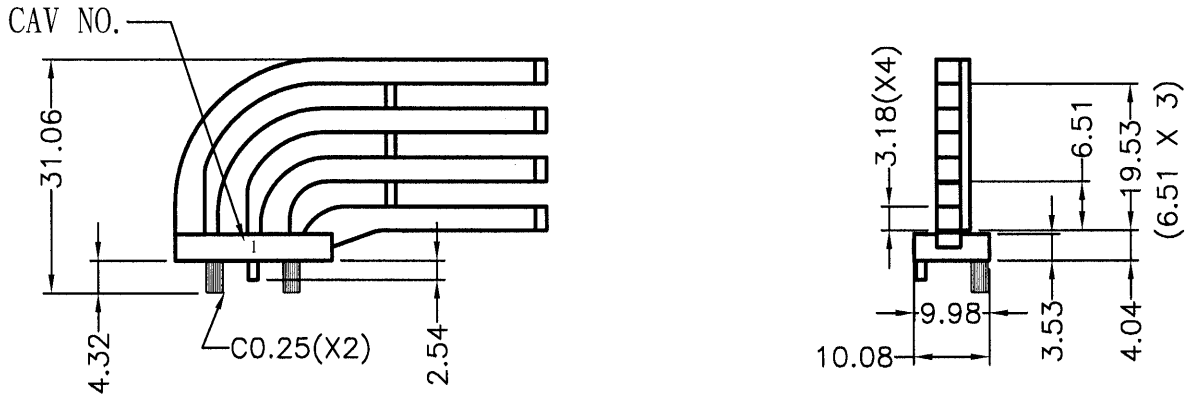

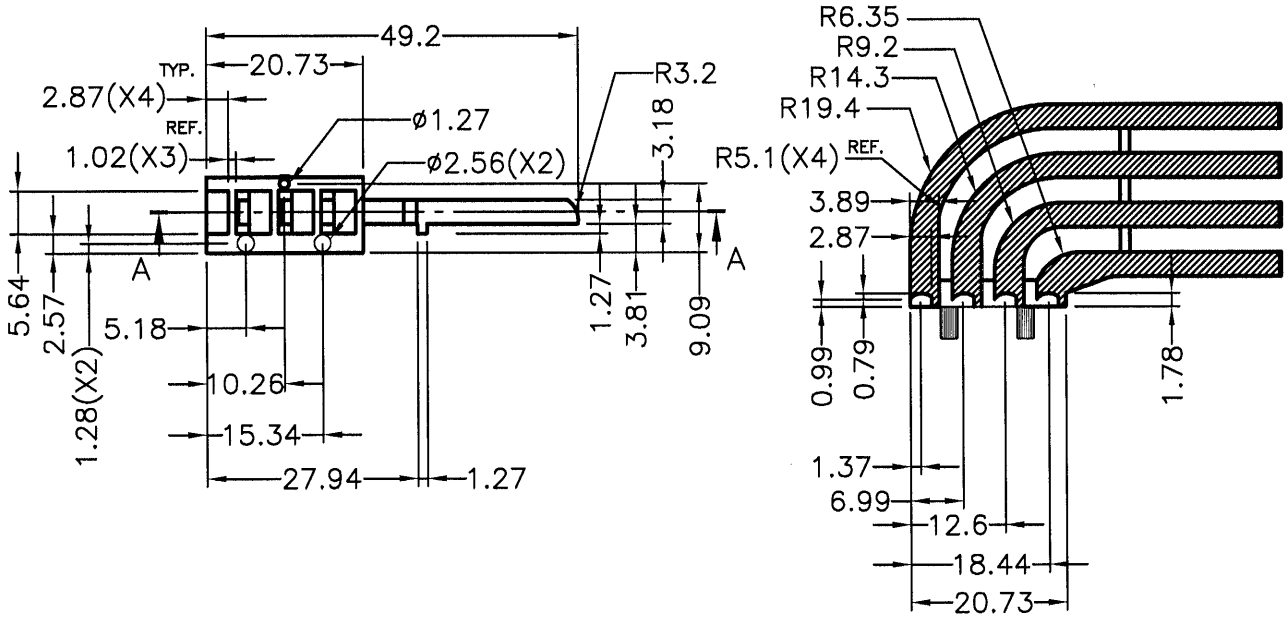

SECTION A–A

康揚企業股份有限公司 KANG YANG HARDWARE ENTERPRISE CO., LTD. 康揚塑膠(東莞)有限公司 KANG YANG PLASTIC(DONG GUAN)CO.,LTD. 康哲電腦配件(吳江)有限公司 KANG CHE COMPUTER COMPONENTS(WUJIANG) CO.,LTD. ISO 9001 ISO 14001 QC 080000	TITLE LIGHT PIPE		SPEC. DWG.
	MATERIAL PC UL94V-0		DATE 2014.01.10
	FINISH SEE ABOVE		DRAWN ROBERT
PART NUMBER LPEB4-1V0	DRAWING NUMBER LPEB4-1	COLOR CLEAR	CHECK
SIZE A4 / SCALE 1:1	UNIT mm / REV A	UNLESS OTHERWISE SPECIFIED TOLERANCE ±0.25	APPROVED Kang