Click to ORDER samples

AMA18X-Y

Wall Mount Adaptor

The AMA18X-Y is a small wall mount type AC plug detachable adapter. Offering a commercial input voltage range of 90-264VAC and an output power of 18W. This adapter will offer many benefits to powering your new system such as low power consumption, high efficiency (meets ErP Tier 2 2016), meeting IEC60950-1 / IEC62368-1, FCC, Class B, CISPR22, Class B.

It also features an isolation of 3000VAC for improved reliability and system safety and comes standard with output short circuit protection (OSCP) and output over-current protection (OCP).

Features

- Universal Input: 90 - 264VAC/47 - 63Hz
- Operating Temp: 0 °C to +40 °C
- High isolation voltage: 3000VAC
- Low ripple & noise, 200mV(p-p), max
- Output short circuit, over-current protection
- Regulated Output

Summary

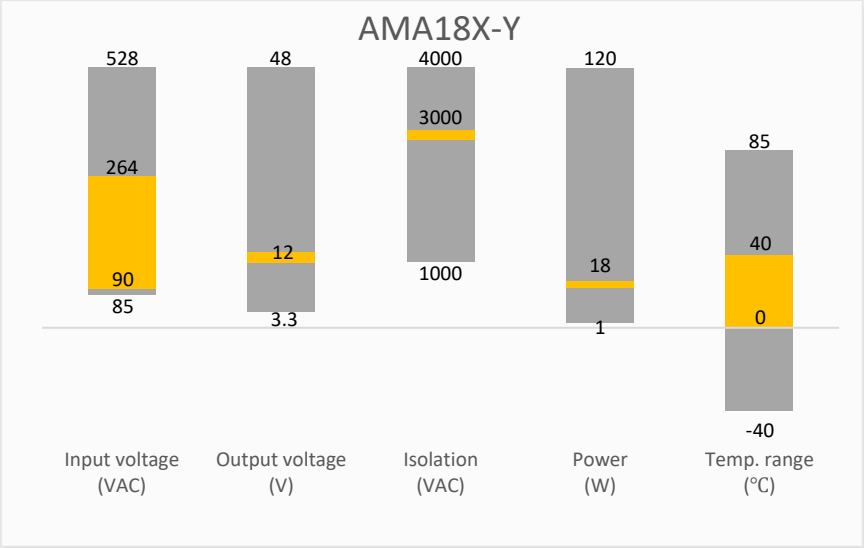

Training

Product Training Video (click to open)

Press Release

Coming Soon!

Application Notes

Applications

Portable Equipment

Industrial

Models & Specifications

General Feature					
Model	**Input Voltage (VC)**	**Output Voltage (VDC)**	**Output Current max (A)**	**Output Power max (W)**	**Efficiency (%)**
AMA18XU-120150Y	90 - 264	12	1.5	18	85
AMA18XE-120150Y	90 - 264	12	1.5	18	85
AMA18XA-120150Y	90 - 264	12	1.5	18	85
AMA18XB-120150Y	90 - 264	12	1.5	18	85
Please refer to below coding rule for completed part numbers. Eg. AMA18XUR5-120150Y for industrial grade adaptor with US type plug which comes with 5.5mm*2.5mm*9.5mm straight standard output plug.					

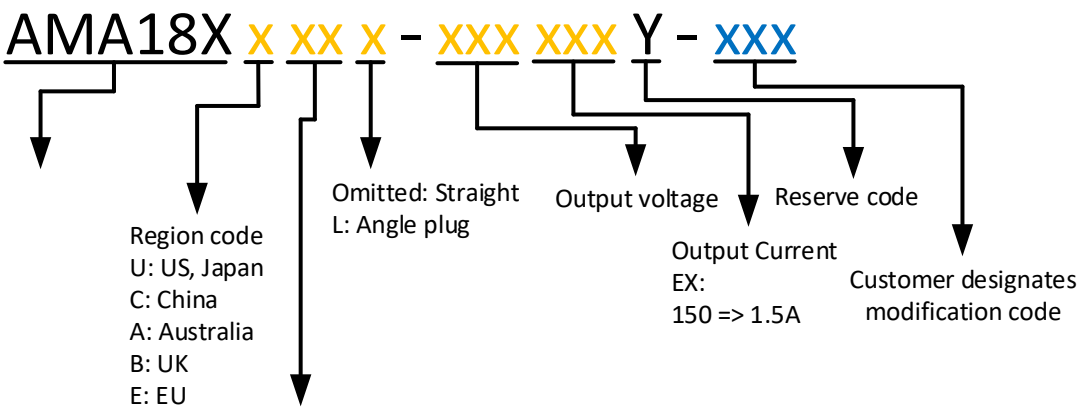

Plug type	Code	O. D.	I. D.	Length
Standard	R1	3.5mm	1.35mm	9.5mm
	R2	3.8mm	1.05mm	9.5mm
	R3	3.8mm	1.35mm	9.5mm
	R4	5.5mm	2.1mm	9.5mm
	R5	5.5mm	2.5mm	9.5mm
Locking	K1	5.5mm	2.1mm	9.5mm
	K2	5.5mm	2.5mm	9.5mm
USB	U2	* USB type C		
* NOTE: The USB type C connector option is only a physical USB type-C connector which does not support PD and programmable power supply.				

Input Specification					
Parameters	**Conditions**	**Minimum**	**Typical**	**Maximum**	**Units**
Voltage range		90	100 - 240	264	VAC
Frequency		47	50 - 60	63	Hz
Input current	Vin at 100~240VAC			0.5	A
Inrush current	Vin at 240VAC, 12VDC output			50	A
Leakage Current	240VAC/50Hz		0.25		mA

Output Specification

Parameters	Conditions	Minimum	Typical	Maximum	Units
Output voltage			12		VDC
Output current		0		1.5	A
Voltage regulation				±5	%
Ripple and Noise	20 MHz bandwidth			200	mVp-p
Start-up time	Full load, Vin at 230VAC/50Hz			3	S
Hold-up time	90% load, Vin at 115VAC/60Hz	10			mS

Ripple and Noise are measured at 20MHz bandwidth by using a 0.1uF (M/C) and 10uF (E/C) parallel capacitor.

Isolation Specifications

Parameters	Conditions	Typical	Rated	Units
Tested I/O voltage	leakage current < 10mA		3000	VAC
Resistance	500Vdc, 60s		50	MΩ

General Specification

Parameters	Conditions	Minimum	Typical	Maximum	Units
Operating temperature		0		40	°C
Storage temperature		-20		70	°C
Power consumption	Vin at 100 -240VAC , no load			75	mW
Humidity	Non-condensing	20		90	% RH
Altitude	Operation	0		2000	m
Efficiency standard	ErP Tier 2 (2016)				
Short circuit protection	Continuous, auto recovery				
Over current protection	Continuous, auto recovery				
Dimensions (L x W x H)	Adaptor body US plug EU plug AUS plug UK plug	3.55 x 1.97 x 1.49 inches (90.26 x 50.02 x 37.90mm) Ø1.48 x 1.11 inches (Ø37 x 28.16mm) Ø1.48 x 1.90 inches (Ø37 x 48.36mm) 3.55 x 1.66 x 2.87 inches (55.00 x 42.20 x 28.00mm) 2.00 x 1.95 x 1.17 inches (50.74 x 49.50 x 29.70mm)			
Output cable length	59.06 inches (1500mm)				
MTBF	> 175 000 hrs (SR332, t=+25°C)/Full Load				

All specifications in this datasheet are measured at an ambient temperature of 25°C, humidity<75%, nominal input voltage and at rated output load unless otherwise specified.

Safety Specifications

Parameters		
Agency approvals	cULus UL62368-1, CE EN62368-1	
Standards	Information technology Equipment	Designed to meet IEC62368-1
	EMC - Radiated & Conducted emission	FCC, Class B CISPR 22, Class B

Dimensions

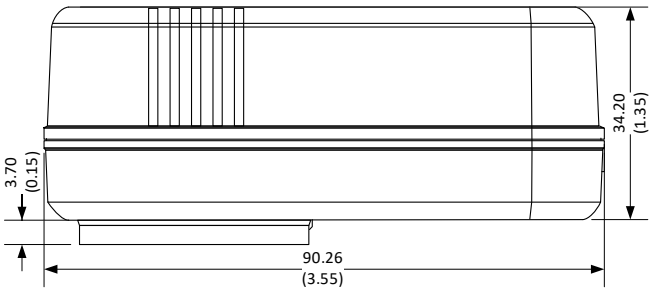

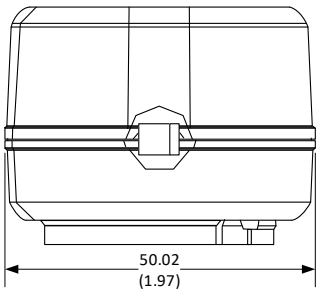

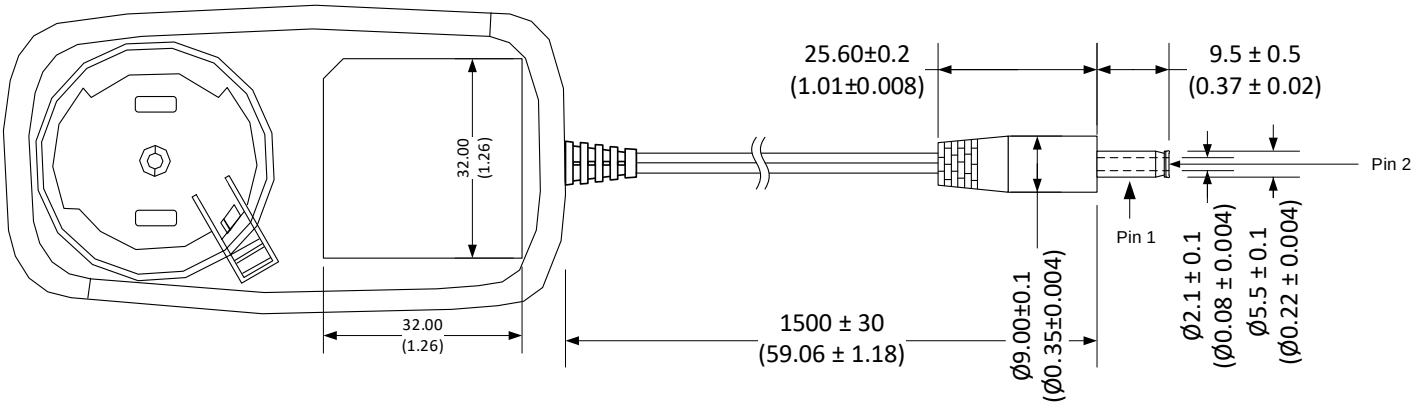

Pin Output Specifications	
Pin	Output Level
1	RTN(-)
2	+Vout

US Plug:

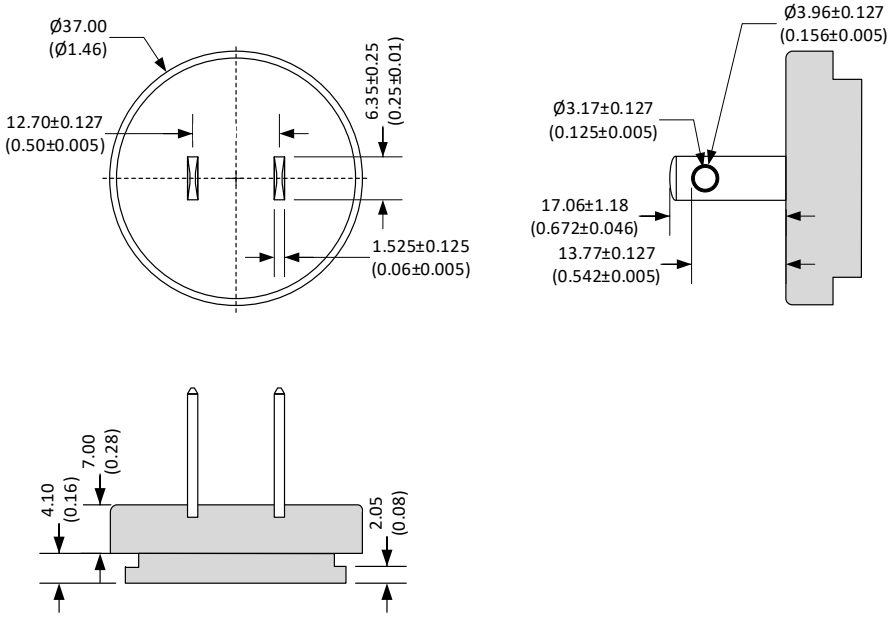

European Plug:

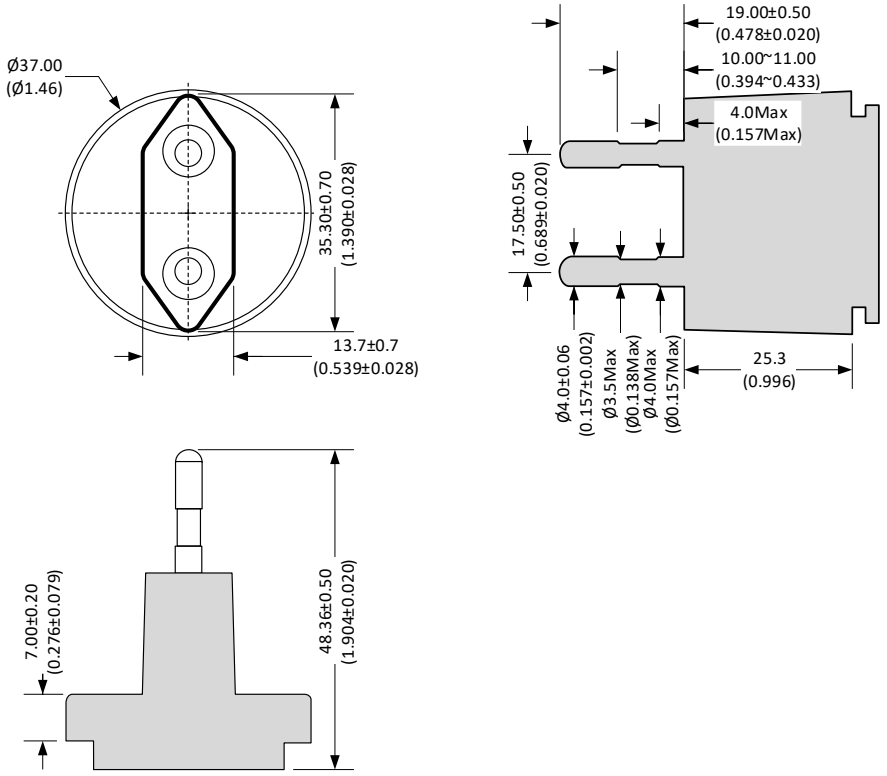

Australian Plug:

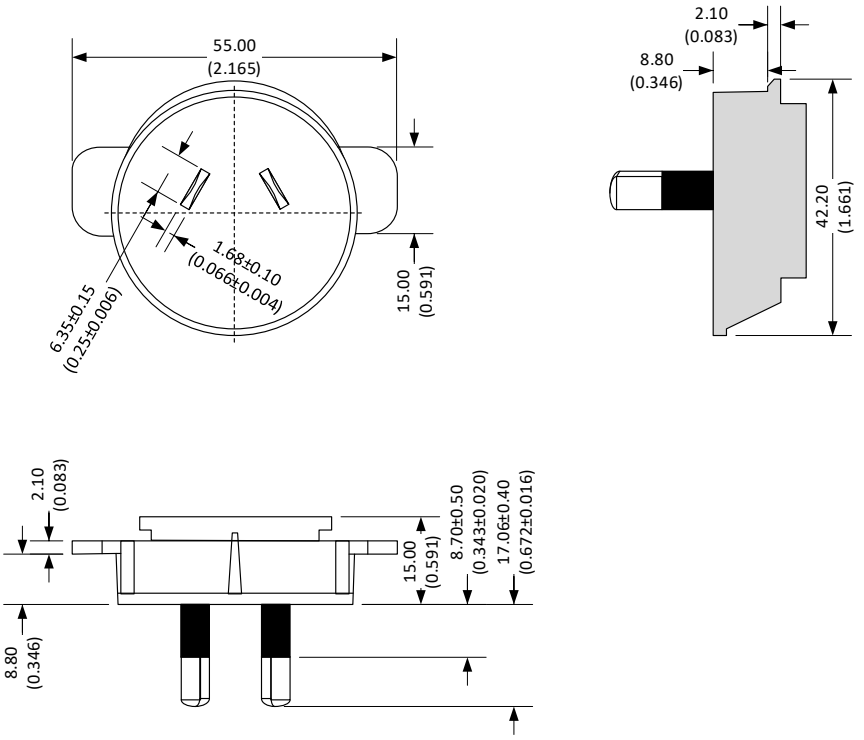

UK Plug:

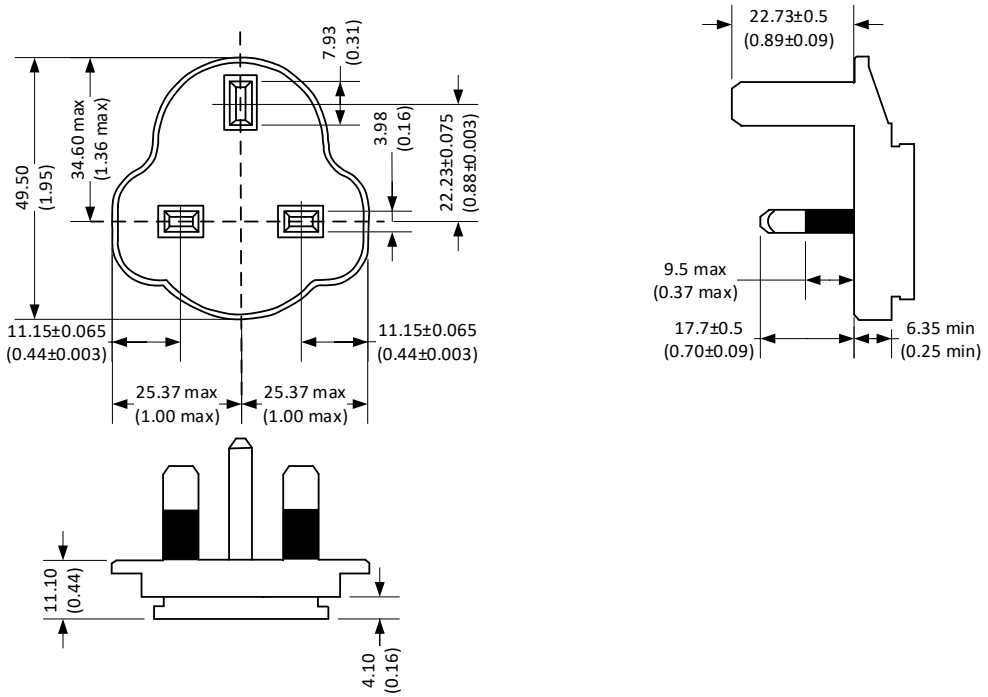

Optional USB Connector:

USB TYPE-C Connector

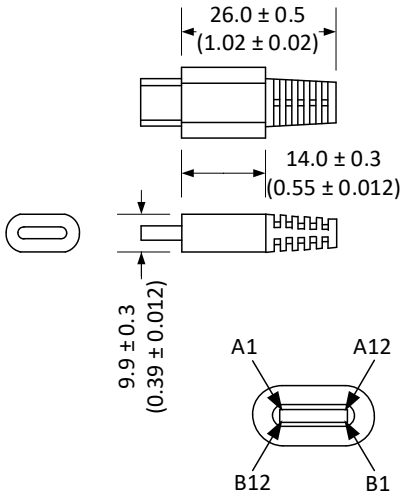

Pin Out Configurations	
Pin No.	Description
A4, A9, B4, B9	+Vout
A1, A12, B1, B12	RTN(-)
Others	Omitted

Optional Barrel Locking Type Connector:

K1 Connector

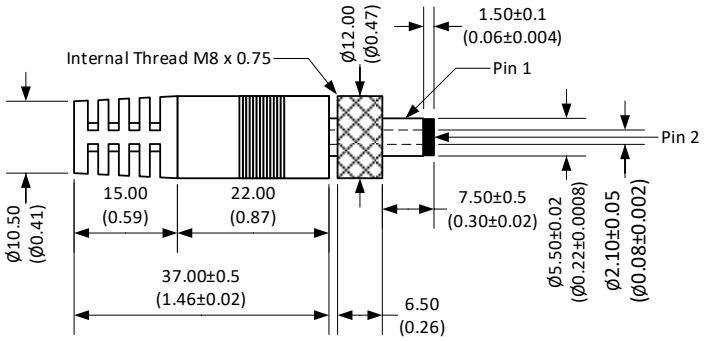

Pin Out Configurations	
Pin No.	Description
1	RTN(-)
2	+Vout

K2 Connector

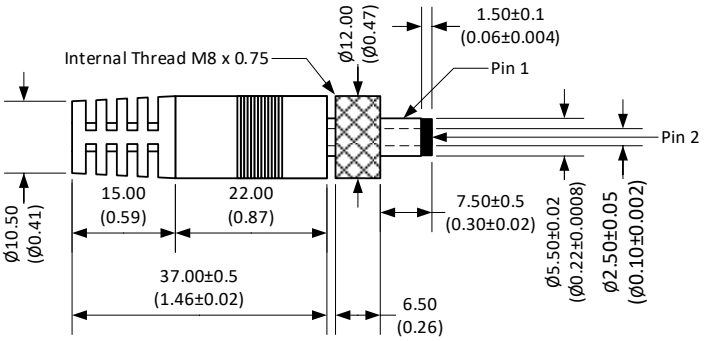

Pin Out Configurations	
Pin No.	Description
1	RTN(-)
2	+Vout

NOTE:

1. USB TYPE-C connector: Limited maximum output voltage of 20V, and maximum output current of 5A.

Packing

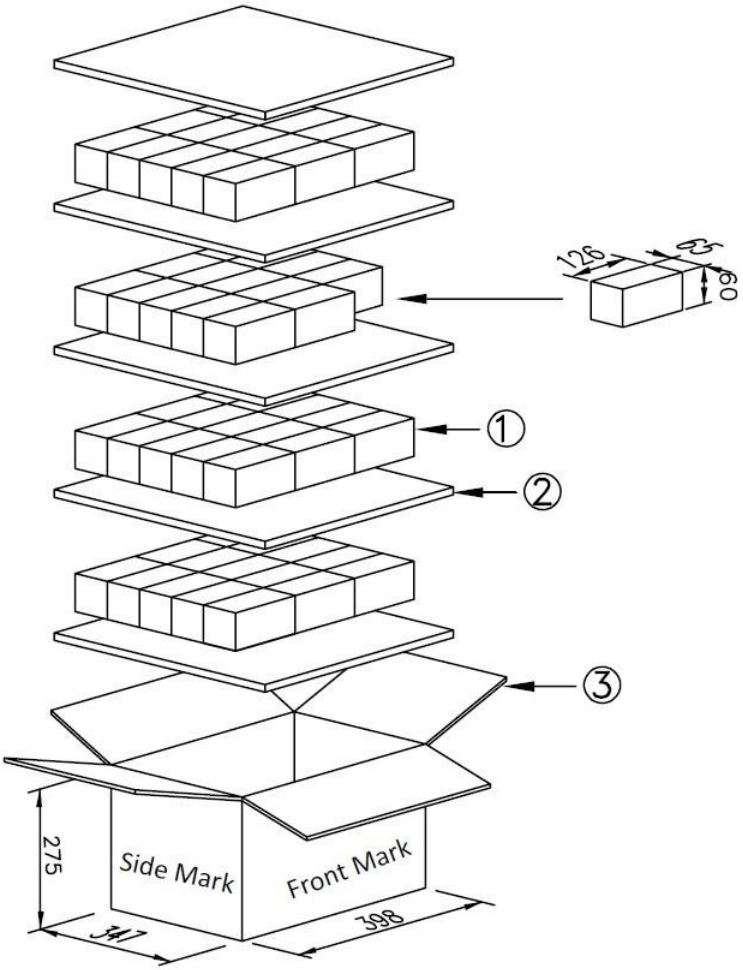

Packing information:

- CARTON : L*W*H=(398*347*275) +/-5mm A=A
- CLAPBOARD : (378*325) +/-3mm B33 5PCS
- WHITE BOX : 126*65*60 C9
- Q'TY : 15*4=60PCS
- NET WEIGHT : (g)(ref)
- UNIT : mm

NOTE: 1. Datasheets are updated as needed and as such, specifications are subject to change without notice. Once printed or downloaded, datasheets are no longer controlled by Aimtec; refer to www.aimtec.com for the most current product specifications. **2.** Product labels shown, including safety agency certifications on labels, may vary based on the date manufactured. **3.** Mechanical drawings and specifications are for reference only. **4.** All specifications are measured at an ambient temperature of 25°C, humidity<75%, nominal input voltage and at rated output load unless otherwise specified. **5.** Aimtec may not have conducted destructive testing or chemical analysis on all internal components and chemicals at the time of publishing this document. CAS numbers and other limited information are considered proprietary and may not be available for release. **6.** This product is not designed for use in critical life support systems, equipment used in hazardous environments, nuclear control systems or other such applications which necessitate specific safety and regulatory standards other the ones listed in this datasheet. **7.** Warranty is in accordance with Aimtec's standard Terms of Sale available at www.aimtec.com. **8.** Adaptors are intended for industrial use only.