Click to ORDER samples

AMA24-Y

Wall Mount Adaptor

The AMA24-Y is a small wall plug adapter. Offering a commercial input voltage range of 90-264VAC and output power from 15W to 24W. This adapter will offer many benefits to powering your system such as low power consumption, high efficiency (meets Erp Tier 2), meets IEC62368-1, IEC60950-1, FCC, Class B, CISPR22, Class B.

It also features an isolation of 3000VAC for improved reliability and system safety and comes standard with output short circuit protection (OSCP) and output over-current protection (OCP).

Features

- Universal Input: 90 - 264VAC/47 - 63Hz
- Operating Temp: 0 °C to +45 °C
- High isolation voltage: 3000VAC
- Low ripple & noise, 200mV(p-p), max
- Output short circuit, over-current protection
- Regulated Output

Summary

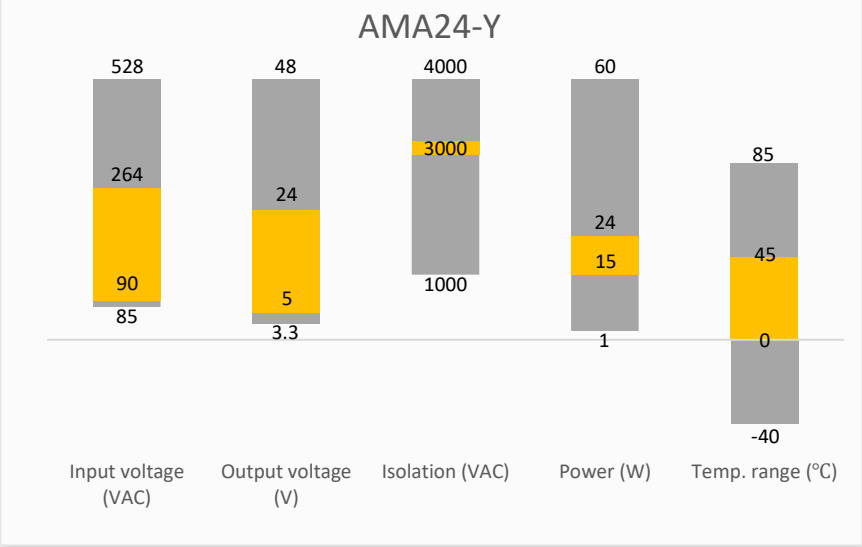

Training

Product Training Video (click to open)

Press Release

Coming Soon!

Application Notes

Applications

Portable Equipment

Industrial

Models & Specifications

General Feature					
Model	Input Voltage (VAC)	Output Voltage (VDC)	Output Current max (A)	Output Power max (W)	Efficiency (%)
AMA24U-050300Y	90 - 264	5	3	15	78
AMA24E-050300Y	90 - 264	5	3	15	78
AMA24B-050300Y	90 - 264	5	3	15	78
AMA24U-120150Y	90 - 264	12	1.5	18	85
AMA24E-120150Y	90 - 264	12	1.5	18	85
AMA24B-120150Y	90 - 264	12	1.5	18	85
AMA24U-240075Y	90 - 264	24	0.75	18	85
AMA24E-240075Y	90 - 264	24	0.75	18	85
AMA24B-240075Y	90 - 264	24	0.75	18	85
AMA24U-120200Y	90 - 264	12	2	24	86
AMA24E-120200Y	90 - 264	12	2	24	86
AMA24B-120200Y	90 - 264	12	2	24	86
Please refer to below coding rule for completed part numbers. Eg. AMA24UR5-120200Y for industrial grade adaptor with US wall plug which comes with 5.5mm*2.5mm*9.5mm straight standard output plug.					

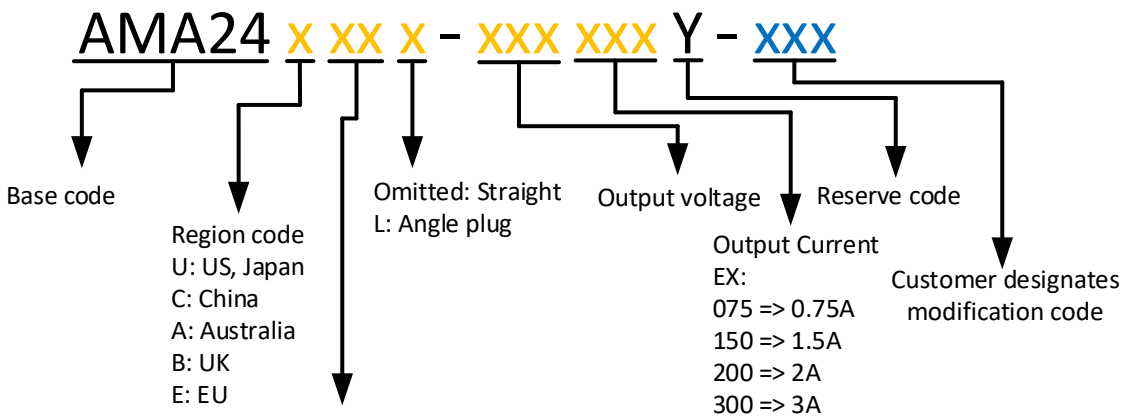

Plug type	Code	O. D.	I. D.	Length
Standard	R1	3.5mm	1.35mm	9.5mm
	R2	3.8mm	1.05mm	9.5mm
	R3	3.8mm	1.35mm	9.5mm
	R4	5.5mm	2.1mm	9.5mm
	R5	5.5mm	2.5mm	9.5mm
Locking	K1	5.5mm	2.1mm	9.5mm
	K2	5.5mm	2.5mm	9.5mm
USB	U1	Micro USB (5V output model only)		
	U2	* USB type C (For 5V, 12V output models only)		
* NOTE: The USB type C connector option is only a physical USB type-C connector which does not support PD and programmable power supply.				

Input Specification

Parameters	Conditions	Minimum	Typical	Maximum	Units
Voltage range		90	100 - 240	264	VAC
Frequency		47	50 - 60	63	Hz
Input current	Vin at 100~240VAC			0.6	A
Inrush current	Vin at 240VAC			50	A
Leakage Current	240VAC/50Hz		0.25		mA

Output Specification

Parameters	Conditions	Minimum	Typical	Maximum	Units
Output voltage	Model AMA24x-050300Y		5		VDC
	Model AMA24x-120150Y		12		
	Model AMA24x-240075Y		24		
	Model AMA24x-120200Y		12		
Output current	Model AMA24x-050300Y	0		3	A
	Model AMA24x-120150Y	0		1.5	
	Model AMA24x-240075Y	0		0.75	
	Model AMA24x-120200Y	0		2	
Voltage regulation	All models			±5	%
Ripple and Noise	20 MHz bandwidth			200	mVp-p
Start-up time	Full load, Vin at 230VAC/50Hz			3	S
Hold-up time	90% load, Vin at 115VAC/60Hz	10			mS
Ripple and Noise are measured at 20MHz bandwidth by using a 0.1uF (M/C) and 10uF (E/C) parallel capacitor.					

Isolation Specifications

Parameters	Conditions	Typical	Rated	Units
Tested I/O voltage	60 sec, leakage current < 10mA		3000	VAC

General Specification

Parameters	Conditions	Minimum	Typical	Maximum	Units
Operating temperature	15W, 18W output	0		40	°C
	24W output	0		45	°C
Storage temperature	15W, 18W output	-20		70	°C
	24W output	-20		80	°C
Power consumption	Vin at 100 -240VAC, no load			100	mW
Humidity	Non-condensing	20		90	% RH
Altitude	Operation	0		2000	m
DOE LEVEL	VI				
Short circuit protection	Continuous, auto recovery				
Over current protection	Continuous, auto recovery				

Dimensions (L x W x H)	US EU UK	2.83 x 1.34 x 2.87 inches (72.00 x 34.00 x 73.00mm) 2.83 x 1.34 x 3.48 inches (72.00 x 34.00 x 88.30mm) 2.83 x 1.97 x 3.20 inches (72.00 x 50.00 x 81.33mm)
Output cable length	59.06 inches (1500mm)	
MTBF	> 175 000 hrs (Telcordia SR332, t=+25°C)/Full Load	
All specifications in this datasheet are measured at an ambient temperature of 25°C, humidity<75%, nominal input voltage and at rated output load unless otherwise specified.		

Safety Specifications		
Parameters		
Agency approvals	cULus UL62368-1, CE EN62368-1	
Standards	Information technology Equipment	Designed to meet IEC62368-1
	EMC - Radiated & Conducted emission	FCC, Class B CISPR32, Class B EN55032, Class B
	Surge Immunity	IEC61000-4-5, L-N 1KV/1.2*50us, 5 time, no function error

Dimensions

US Plug:

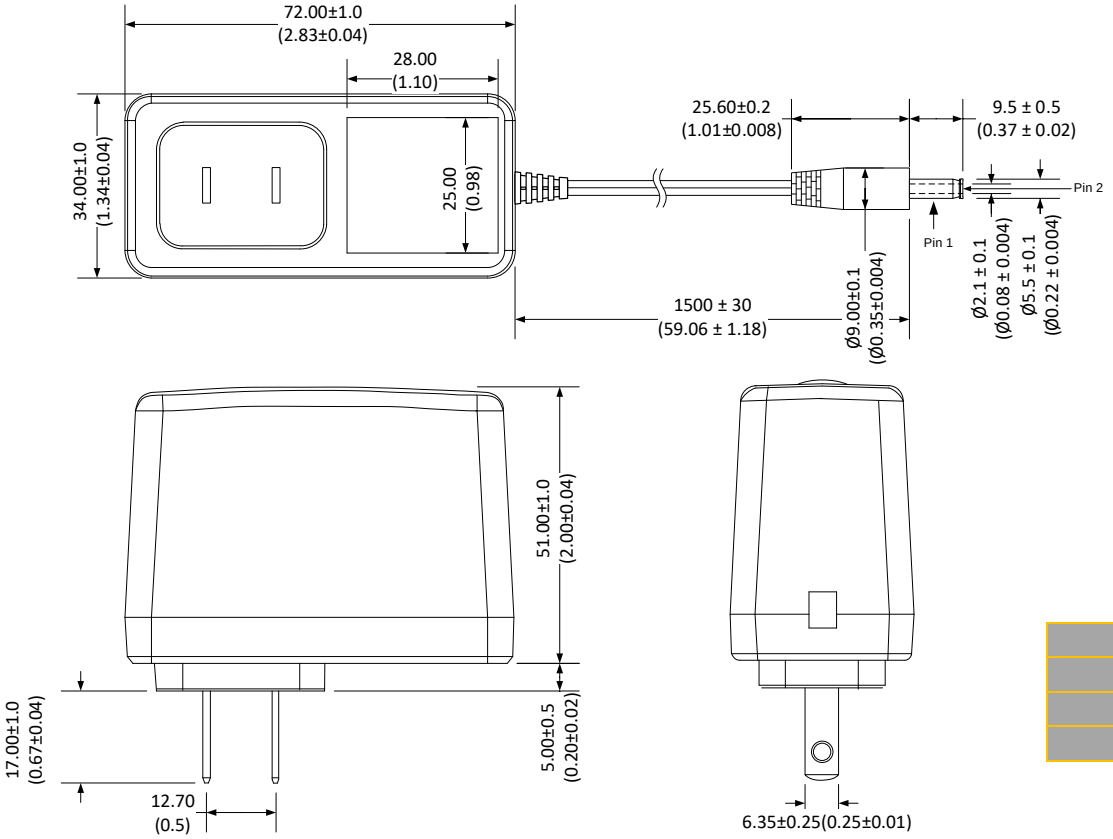

Pin Output Specifications	
Pin	Output Level
1	RTN(-)
2	+Vout

European Plug:

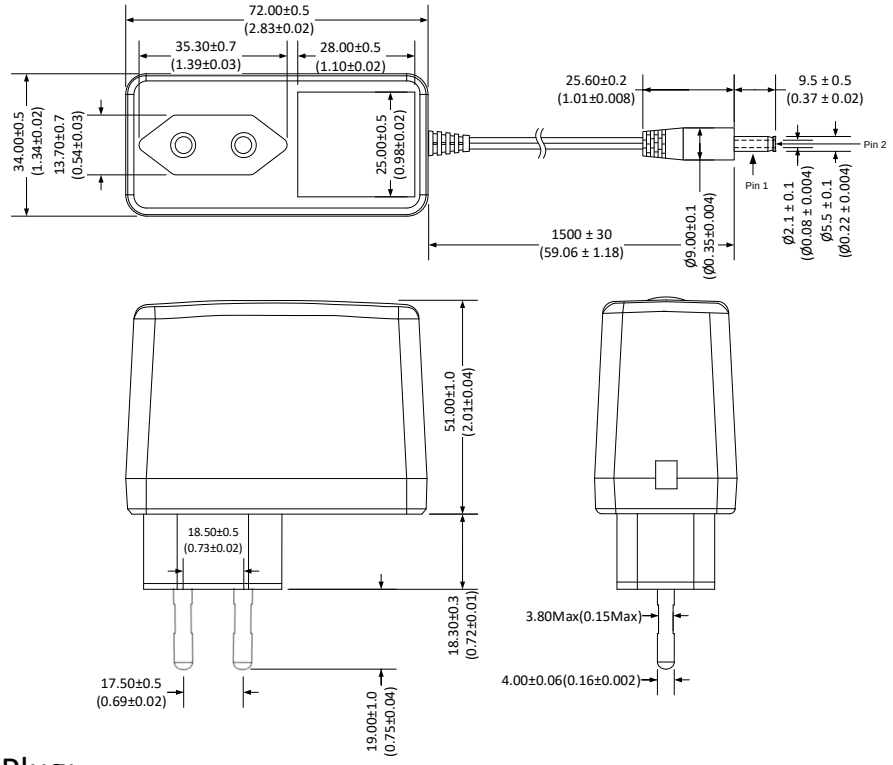

Pin Output Specifications	
Pin	Output Level
1	RTN(-)
2	+Vout

UK Plug:

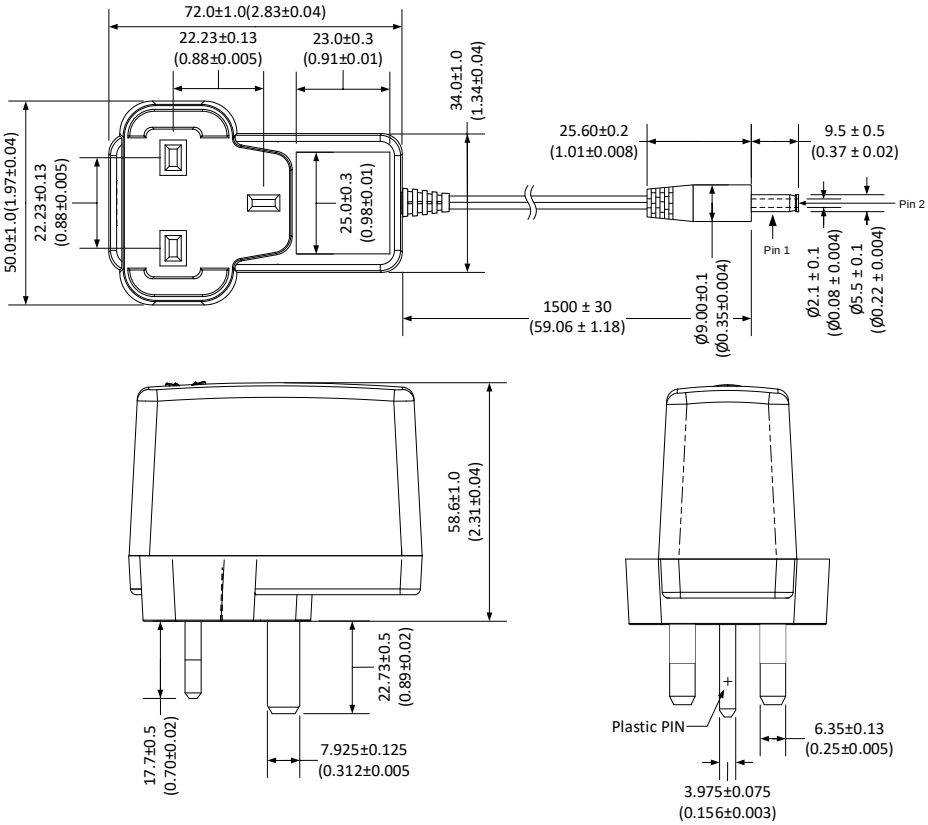

Optional USB Connector:

Micro USB Connector

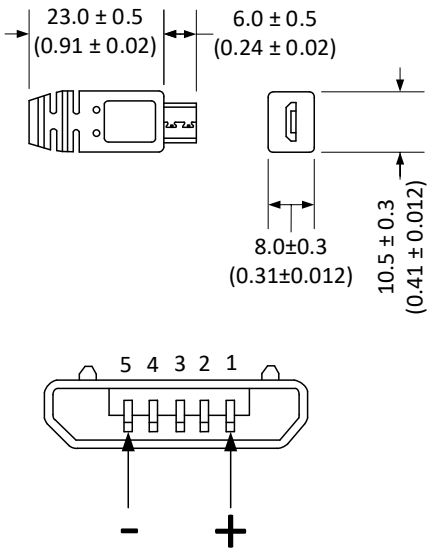

Pin Out Configurations	
Pin No.	Description
1	+Vout
2	Omitted
3	Omitted
4	Omitted
5	RTN(-)

USB TYPE-C Connector

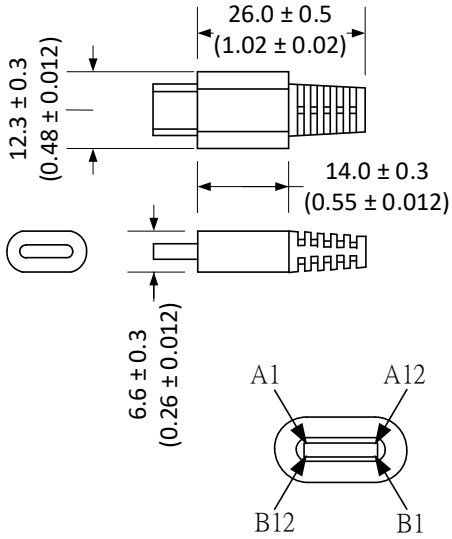

Pin Out Configurations	
Pin No.	Description
A4, A9, B4, B9	+Vout
A1, A12, B1, B12	RTN(-)
Others	Omitted

Optional Barrel Locking Type Connector:

K1 Connector

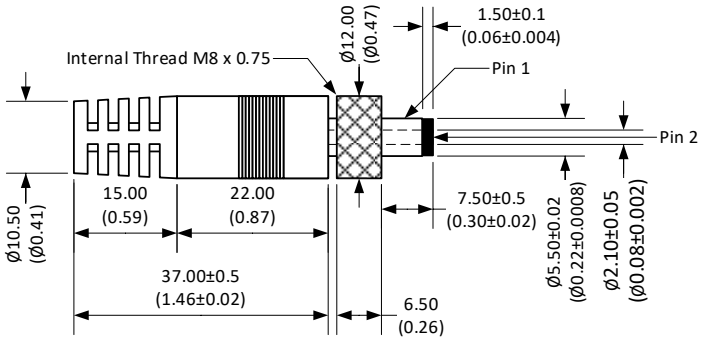

Pin Out Configurations	
Pin No.	Description
1	RTN(-)
2	+Vout

K2 Connector

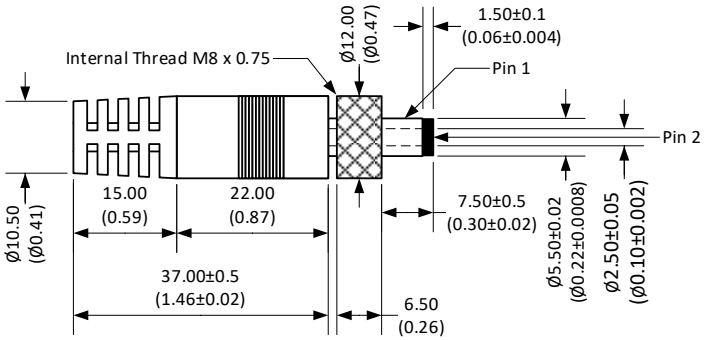

Pin Out Configurations	
Pin No.	Description
1	RTN(-)
2	+Vout

NOTE:

1. Micro USB connector: For 5V output model only, limited max output current of 3A.
2. USB TYPE-C connector: Limited maximum output voltage of 20V, and maximum output current of 5A.

Packing

For US and European Plug:

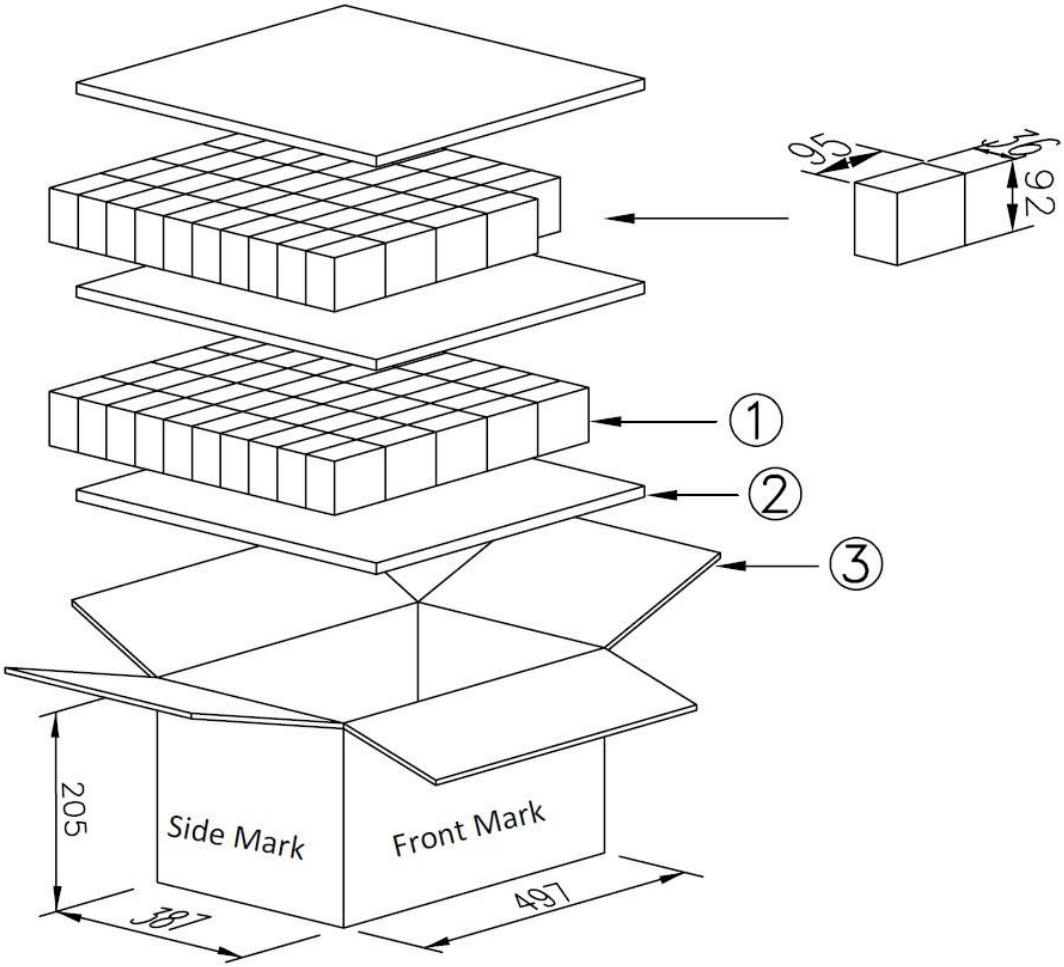

Packing information:

- CARTON : L*W*H=(497*387*205) +/-5mm K=K
- CLAPBOARD : (475*360) +/-3mm B33 3PCS
- WHITE BOX : 95*36*92 450P
- Q'TY : 50*2=100PCS
- NET WEIGHT : (g)(ref)
- UNIT : mm

NOTE: 1. Datasheets are updated as needed and as such, specifications are subject to change without notice. Once printed or downloaded, datasheets are no longer controlled by Aimtec; refer to www.aimtec.com for the most current product specifications. **2.** Product labels shown, including safety agency certifications on labels, may vary based on the date manufactured. **3.** Mechanical drawings and specifications are for reference only. **4.** All specifications are measured at an ambient temperature of 25°C, humidity<75%, nominal input voltage and at rated output load unless otherwise specified. **5.** Aimtec may not have conducted destructive testing or chemical analysis on all internal components and chemicals at the time of publishing this document. CAS numbers and other limited information are considered proprietary and may not be available for release. **6.** This product is not designed for use in critical life support systems, equipment used in hazardous environments, nuclear control systems or other such applications which necessitate specific safety and regulatory standards other the ones listed in this datasheet. **7.** Warranty is in accordance with Aimtec's standard Terms of Sale available at www.aimtec.com. **8.** Adaptors are intended for industrial use only.