ISL Products International

# ø42mm Planetary Gear Motor
# Right Angle (90°)

## *MOT-IG42CRGM 24:1*

*Online ID#: RPGM-42CR-24-24-292-02*

Our Right Angle Planetary Gear Motors are an inline solution providing excellent torque output at various speeds. They are equiped to handle varying loads and are best for intermittent duty operation. With endless performance combinations, we have a fully tailored gear motor solution for you.

**Contact Us** for alternative solutions!

## Specifications

| | | | |
|---|---|---|---|
| **Gearhead Type:** | Planetary - Right Angle | **No-Load Speed:** | 292 rpm *(+/- 10%)* |
| **Motor Type:** | Carbon - Brushed | **No-Load Current:** | <600 mA |
| **Rated Voltage:** | 24V DC | **Stall Torque:** | 72 kg.cm |
| **Rated Speed:** | 244 rpm | **Max. Power:** | 53 W |
| **Rated Torque:** | 12 kg.cm | **Reduction Ratio:** | 24:1 |
| **Termination Style:** | Terminals | **Right Angle Reduction:** | 1:1 |

## Dimensions

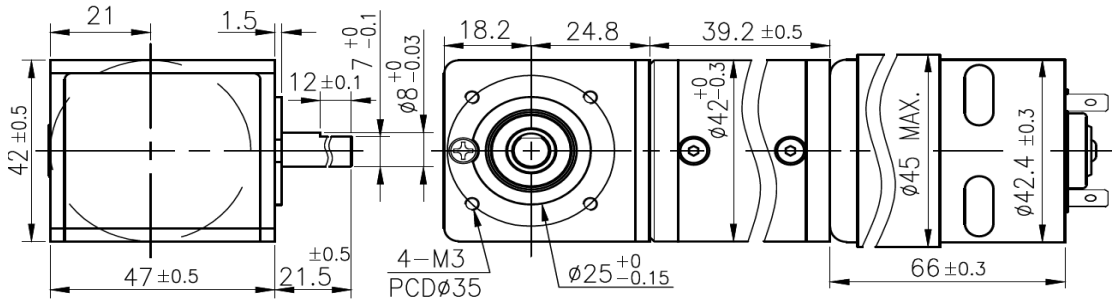


units: mm

## Performance Curve

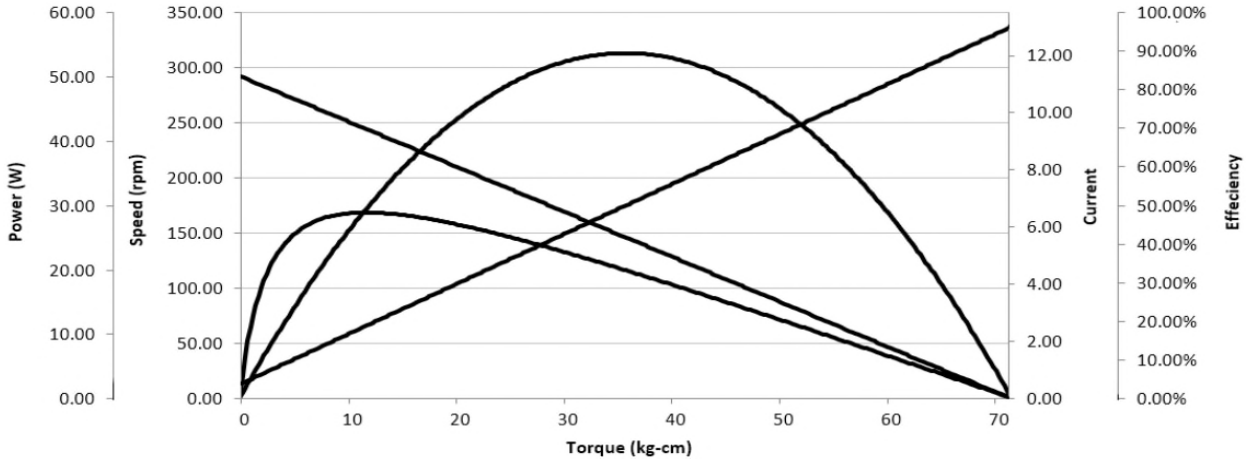


*© 2022 ISL Products International Ltd. Specifications subject to change without notice.*