MICRO SWITCH
FREEPORT ILLINOIS U S A
A DIVISION OF HONEYWELL
FED. MFG. CODE 91929

SWITCH-ENCLOSED

CATALOG LISTING
221EN54-R
CUSTOMER PART #
18876-13027441-1

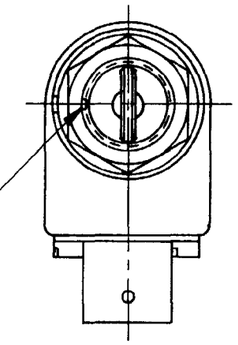

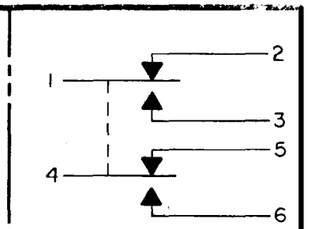

CIRCUIT DIAGRAM
(IN FREE POSITION)

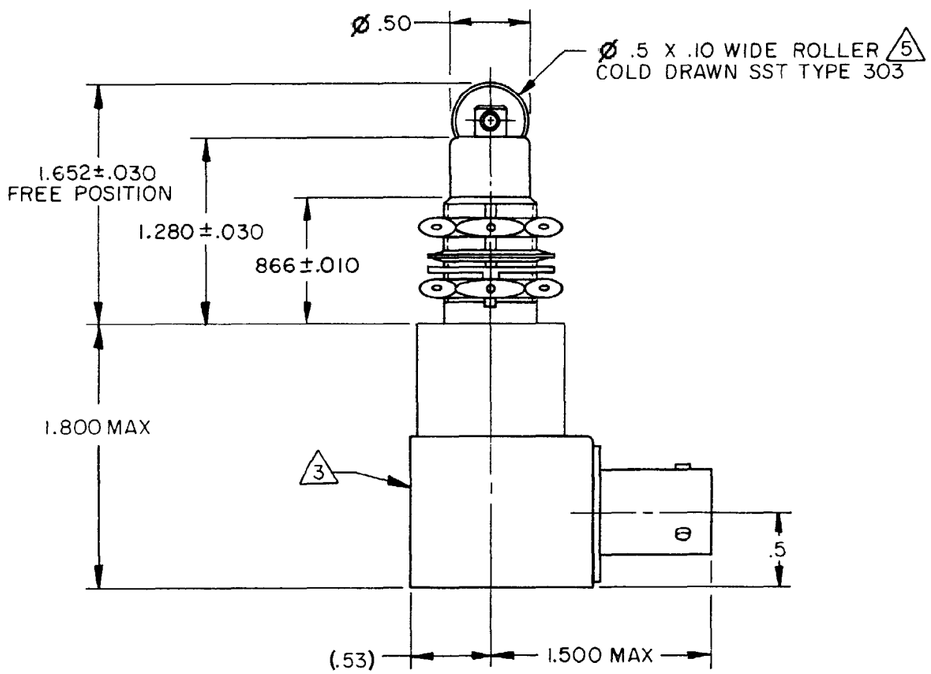

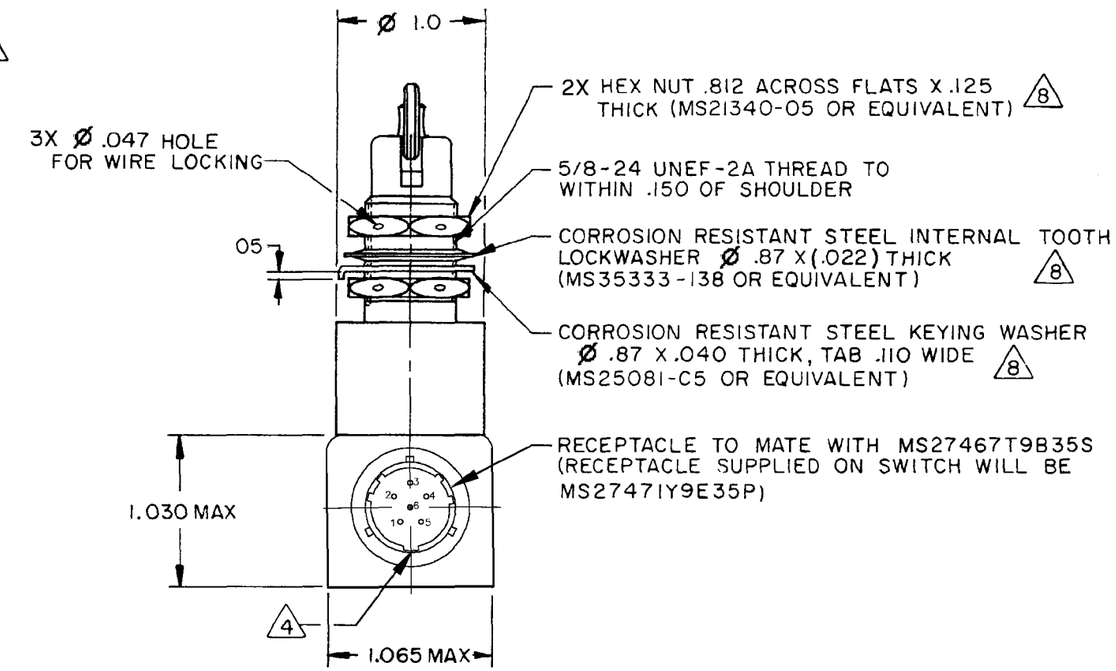

NOTES
1 - ALL EXPOSED PARTS ARE CORROSION RESISTANT
2 - SWITCH SEALED PER MIL-PRF-8805 SYMBOL 4
3 CATALOG LISTING, CIRCUIT DIAGRAM, FSCM NO. AND CUSTOMER PART NO. PERMANENTLY MARKED ON SIDE OF SWITCH
4 RECEPTACLE POLARIZING KEY POSITION
5 ROLLER WILL ROTATE FREELY
6 PLUNGER SEAL MATERIAL - E.P. RUBBER
7 - NOTED ELECTRICAL RATING APPLY AS SPECIFIED IN MIL-PRF-8805/40-1 UP TO 185°F
8 HARDWARE MAY BE PACKAGED UNASSEMBLED PER MIL-PRF-8805
9 - SWITCH RATED FOR -65°F TO 185°F CONTINUOUS OPERATING CONDITION AND 250°F IN NONOPERATING CONDITION

ANSI Y14.5M-1982 APPLIES

THIS DRAWING COVERS A PROPRIETARY ITEM AND IS THE PROPERTY OF MICRO SWITCH, A DIVISION OF HONEYWELL. THIS DRAWING IS NOT TO BE COPIED OR USED WITHOUT THE APPROVAL OF MICRO SWITCH.

CHARACTERISTICS

OPERATING FORCE	6-10 LB
FULL OVERTRAVEL FORCE	30 LB MAX
RELEASE FORCE	4 LB MIN
PRETRAVEL	.040 MAX
DIFFERENTIAL TRAVEL	.020 MAX
OVERTRAVEL	.250 MIN

ELECTRICAL DATA

CONTACT ARRANGEMENT
SEE CIRCUIT DIAGRAM

LOAD	28 VDC	
	SEA LEVEL	50,000 FT
RES	4	4
IND	2	2
MOTOR	4	
LAMP		

SCALE FULL
DO NOT SCALE PRINT
TOLERANCES
APPLY TO DESIGN UNITS. CONVERSIONS ARE ONLY FOR REFERENCE. UNLESS NOTED, TOLERANCES ARE ±

	DIM. mm	TOL. mm/in	DIM. in	TOL. mm/in
NO DECIMALS	X	1/.04		
ONE PLACE	X.X	0.4/.016	X.X	0.61/.03
TWO PLACES	X.XX	0.15/.006	X.XX	0.38/.015
THREE PLACES			X.XXX	0.13/.005
ANGLES				

DESIGN UNITS: SI METRIC ☐ US CUSTOMARY ■
THIRD ANGLE PROJECTION
WEIGHT 7 OZ MAX

CATALOG LISTING 221EN54-R
PAGE 1 OF 1
ISSUE 11 M
REPLACES X77969-EN
RELEASE NO. PR-12904-T
CHECK
REVISIONS
A PR12904 TSK 14 MAY 84
B C058843 TSK 22 JAN 86
C CO-95258 GJW 18 JUN 99
D 200942 CSL 7 AUG 00
E 0010299 TCC/AP 27 DEC 04
CHECK
DRAWN TSK 11 MAY 84
RASTER FO-5285-1-B