MICRO SWITCH
FREEPORT ILLINOIS U S A
A DIVISION OF HONEYWELL
FED. MFG. CODE 81929

SWITCH-ENCLOSED

CATALOG LISTING
5EN43-R

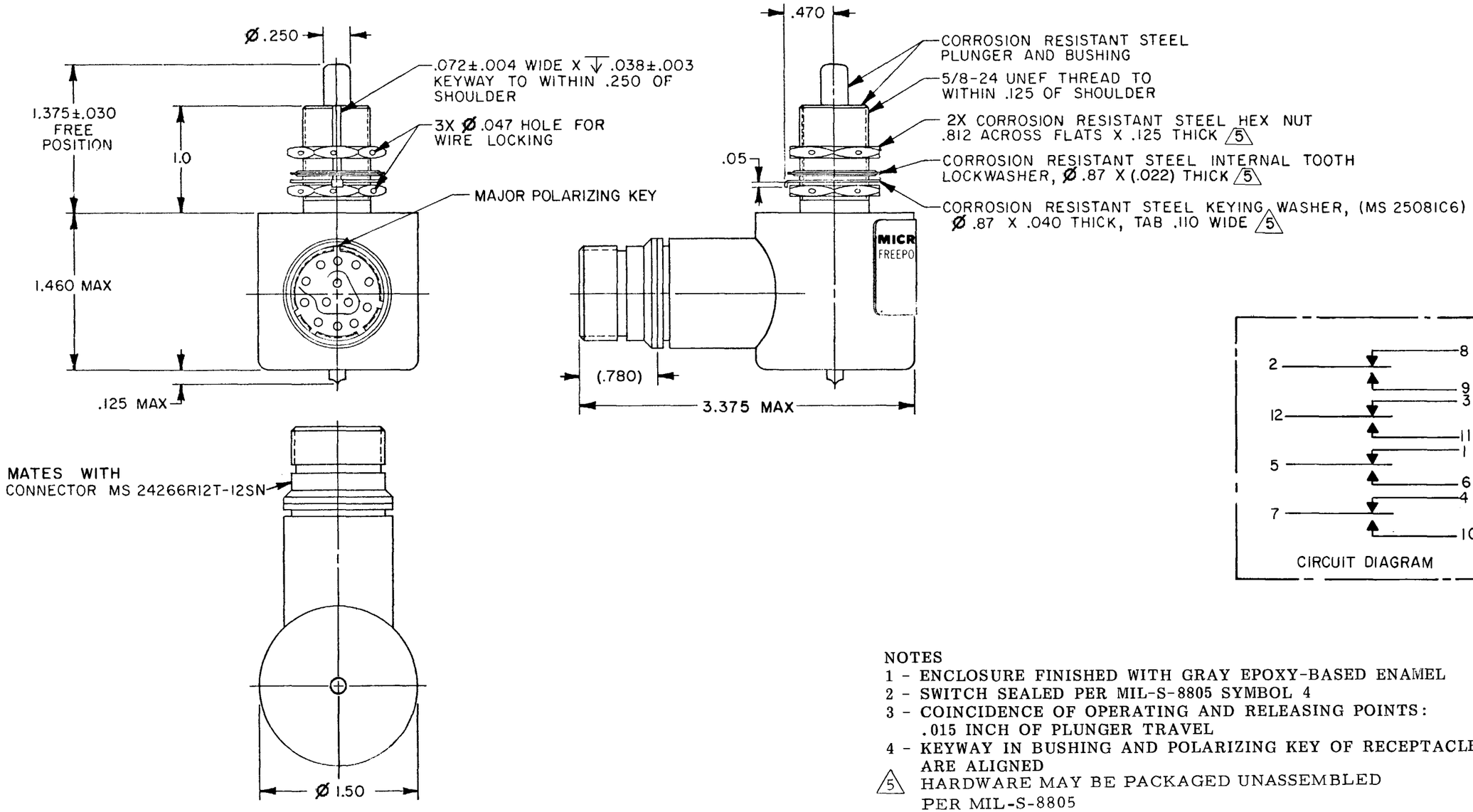

NOTES
1 - ENCLOSURE FINISHED WITH GRAY EPOXY-BASED ENAMEL
2 - SWITCH SEALED PER MIL-S-8805 SYMBOL 4
3 - COINCIDENCE OF OPERATING AND RELEASING POINTS: .015 INCH OF PLUNGER TRAVEL
4 - KEYWAY IN BUSHING AND POLARIZING KEY OF RECEPTACLE ARE ALIGNED
5 - HARDWARE MAY BE PACKAGED UNASSEMBLED PER MIL-S-8805
6 - CIRCUIT DIAGRAM, DATE CODE, FED. MFG. CODE AND CATALOG LISTING ARE SHOWN ON NAMEPLATE

THIS DRAWING COVERS A PROPRIETARY ITEM AND IS THE PROPERTY OF MICRO SWITCH, A DIVISION OF HONEYWELL. THIS DRAWING IS NOT TO BE COPIED OR USED WITHOUT THE APPROVAL OF MICRO SWITCH.

THIRD ANGLE PROJECTION

SCALE FULL

DO NOT SCALE PRINT

TOLERANCES
APPLY TO DESIGN UNITS. CONVERSIONS ARE ONLY FOR REFERENCE. UNLESS NOTED, TOLERANCES ARE ±

	DIM. mm	TOL. mm/in	DIM. in	TOL. mm/in
NO PLACES	X	1/.04		
ONE PLACE	X.X	0.4/.016	X.X	0.8/.03
TWO PLACES	X.XX	0.15/.006	X.XX	0.38/.015
THREE PLACES			X.XXX	0.13/.005
ANGLES				

DESIGN UNITS SI METRIC ☐ US CUSTOMARY ■

RAW MATERIAL-COMMERCIAL STANDARD
MICRO SWITCH STANDARDS APPLY
DIMENSIONS ARE TO BE MET BEFORE PROTECTIVE COATINGS ARE APPLIED

WEIGHT 7 OZ MAX

CHARACTERISTICS

OPERATING FORCE	6-12 LB
FULL OVERTRAVEL FORCE	30 LB MAX
RELEASE FORCE	4 LB MIN
PRETRAVEL	.040 MAX
DIFFERENTIAL TRAVEL	.030 MAX
OVERTRAVEL	.250 MIN

ELECTRICAL DATA

CONTACT ARRANGEMENT
4X S P D T

LOAD	28 VDC	
	SEA LEVEL	50,000 FT.
RES	4	4
IND	2	2
MOTOR	4	

ANSI Y14.5M-1982 APPLIES

FORMTEK

DRAWN KAK 17 AUG 79
CHECK
CHECK
CHECK
CHECK
CHECK
CHECK

CATALOG LISTING 5EN43-R
PAGE 1 OF 1
ISSUE M 19
RELEASE NO. SR-11309
REPLACES X-28430

REVISIONS
A CO 44351 KAK 17 AUG 79
B CO46777 JAP 12 NOV 79
C CO48097 WJM 15 JUL 80
D CO49323 WJM 8 SEP 81
E CO-93970 SAV 14 JAN 99