MICRO SWITCH
FREEPORT, ILLINOIS U.S.A.
A DIVISION OF HONEYWELL
FED. MFG. CODE 81859

SWITCH - ENCLOSED

CATALOG LISTING
1 VA63

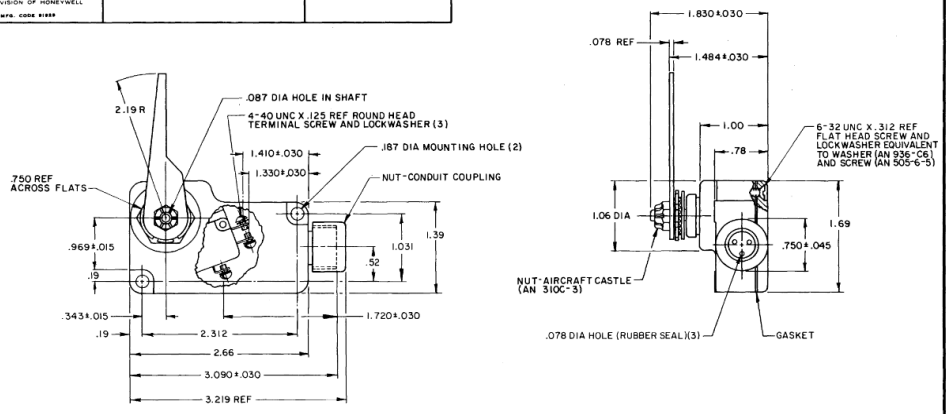

NOTES
1 - UNIT INCLUDES V3-106 BASIC SWITCH (1)
2 - ALUMINUM ALLOY ENCLOSURE ZINC PHOSPHATE COATED AND FINISHED WITH ONE COAT PRIMER
3 - LEVER ARM MAY BE POSITIVELY LOCKED AT INTERVALS OF APPROX 0.2° (1980 POSITIONS)
4 - TOTAL TRAVEL OF LEVER IS APPROX 90° IN EITHER DIRECTION WITH SPRING RETURN TO NEUTRAL
5 - SWITCH WILL PERFORM SATISFACTORILY IN TEMPERATURE TO MINUS 65°F

DRAWING NUMBER	1VA63
ISSUE	X8
RELEASE NO.	PR-5822-T
REPLACES	
CHECK	
REVISIONS	A 1781 20 NOV 80; B 5 M A 2 DEC 80 24 NOV 80; C 2059912 11 OCT 86; D 3061892 24 JUL 87; E 3048537 13 OCT 91; F
CHECK	
C.E.	
APPROVE	
DATE	24 MAR 82
DRAWN	K A G
FD-5255-1-B	

THIS DRAWING COVERS A PROPRIETARY ITEM AND IS THE PROPERTY OF MICRO SWITCH, A DIVISION OF HONEYWELL. THIS DRAWING IS NOT TO BE COPIED OR USED WITHOUT THE APPROVAL OF MICRO SWITCH.

CHARACTERISTICS	
OPERATING TORQUE	30 OZ IN MAX
RELEASE TORQUE	5 OZ IN MIN
PRETRAVEL	30° MAX
DIFFERENTIAL TRAVEL	5° MAX
OVERTRAVEL	55° MIN
CHARACTERISTICS APPLY TO OPERATION OF SWITCH IN EITHER DIRECTION 4	

ELECTRICAL DATA

CONTACT ARRANGEMENT
S P D T

10 A-1/3 HP-125 OR 250 VAC
1/2 A-125 VDC; 1/4 A-250 VDC

SCALE FULL
DO NOT SCALE PRINT

TOLERANCES
APPLY TO DESIGN DIMENSIONS ONLY. DIMENSIONS ARE ONLY FOR REFERENCE UNLESS NOTED. TOLERANCES ARE ±

	DIM mm	TOL. mm	DIM IN	TOL. INCH
NO PLACES		WHOLE NUMBERS		
ONE PLACE	0.X	0.1	0.X	0.0
TWO PLACES	0.XX	0.05	0.XX	0.01
THREE PLACES	0.XXX	0.025	0.XXX	0.005
ANGLES				

DESIGN UNITS: SI METRIC ☐ LB CUSTOMARY ☒

THIRD ANGLE PROJECTION

WEIGHT .27 LB