G172POG

Push-On Fan Guard for 172mm Fans
178.4x153mm (7.0”x6.0”)

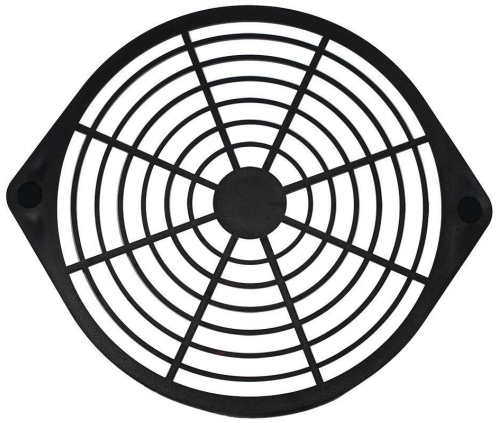

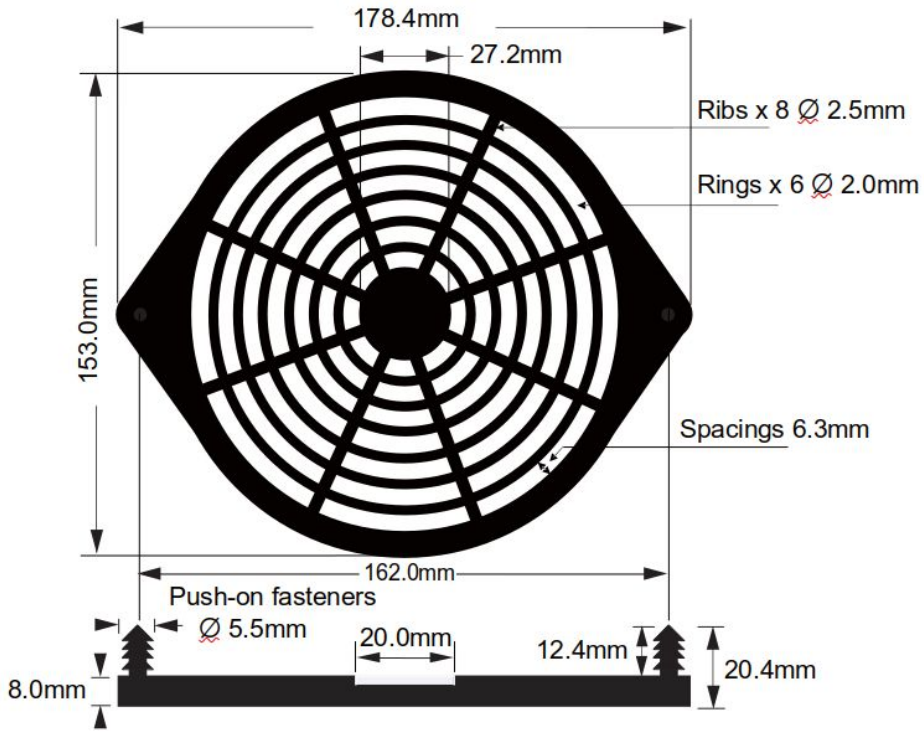

No hardware required for installation

Part Number	G172POG
Frame	Nylon UL94 HB Plastic
Color	Black (Other Colors Available with minimum order purchase)
Fastener to Fastener	162mm
Ring Spacings	6.3mm
Fastener Diameter	5.5mm
Rings Width	2.0mm
Ribs Width	2.5mm
Height	8.0mm
Staging Rings	6 Rings
Weight	0.09 lbs

Meets UL 6.35mm (0.25”) Ring Spacing Requirement

Knight Electronics, Inc.
10557 Metric Drive
Dallas, TX 75243
214-340-0265

RoHS

TÜV

Orion Fans
Information and data is subject to change without prior notification