# OD1225 IP69K Series

DC Fans - 12, 24, 48V
120mm x 25mm (4.7” x 1.0”)

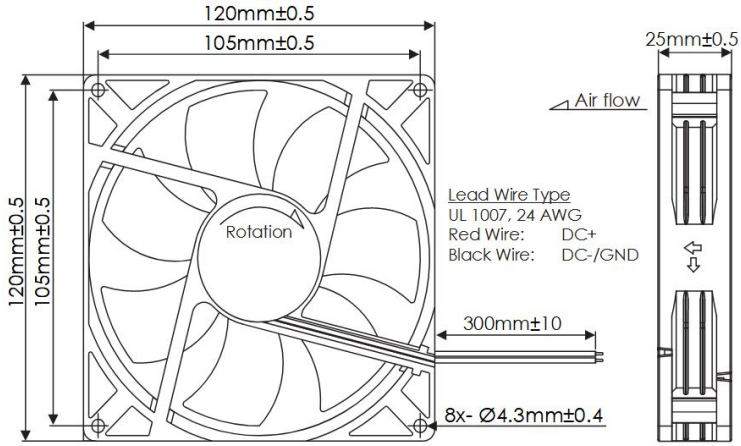


| | |
|---|---|
| Frame | PBT, UL94 V-0 Plastic |
| Impeller | PBT, UL94 V-0 Plastic |
| Connection | 2x Lead Wires, UL 1007 24 AWG |
| Motor | Brushless DC, Auto Cutoff, Auto Restart, Polarity Protected, Electronically Protected, IP69K |
| Bearing System | Dual Ball Bearings |
| Dielectric Strength | 500VDC/min, <1mA |
| Insulation Resistance | ≥10MΩ @ 500 VDC |

Operating Temperature
-20°C ~ +65°C

Storage Temperature
-20°C ~ +75°C

Life Expectancy
70,000 Hours (L10 at 40°C)

Available Options
PWM Speed Control Input
Tachometer Output
Alarm Output
5 Volt Models

Weight: 0.34 lbs.

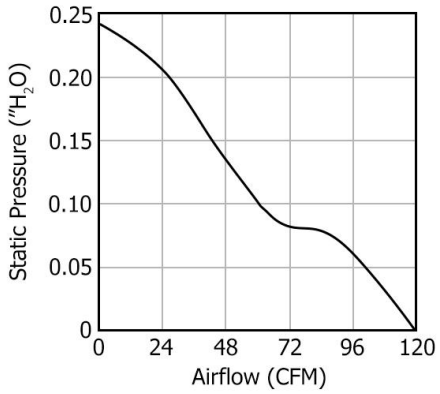


| Part Number | Rated Voltage (Volts DC) | Voltage Range (Volts DC) | Input Power (Watts) | Rated Current (Amps)(Max) | Rated Speed (RPM) | Max Airflow (CFM) | Noise Level (dBA) | Max Static Pressure (“$H_2O$) |
|---|---|---|---|---|---|---|---|---|
| OD1225-12HBIP69K | 12 | 8 ~ 13.8 | 5.4 | 0.45 | 3100 | 120 | 42 | 0.24 |
| OD1225-24HBIP69K | 24 | 15 ~ 26 | 7.7 | 0.32 | 3100 | 120 | 42 | 0.24 |
| OD1225-48HBIP69K | 48 | 28 ~ 52 | 8.6 | 0.18 | 3100 | 120 | 42 | 0.24 |

Knight Electronics, Inc.
10557 Metric Drive
Dallas, TX 75243
214-340-0265

Revised 3/10/2025
m0