OD6025 Sealed Sleeve Series

DC Fans - 12, 24, 48V
60mm x 25mm (2.4" x 1.0")

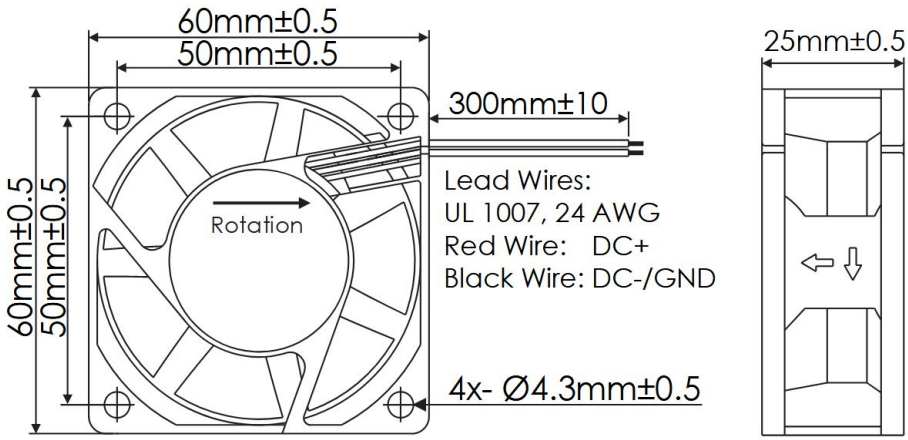

Frame	PBT, UL94 V-0 Plastic
Impeller	PBT, UL94 V-0 Plastic
Connection	2x Lead Wires, 24 AWG
Motor	Brushless DC, Auto Cutoff, Auto Restart, Polarity Protected, Electronically Protected
Bearing System	Sealed Sleeve
Dielectric Strength	500VDC/min, <1mA
Insulation Resistance	≥10MΩ @ 500 VDC

Operating Temperature
-20°C ~ +65°C

Storage Temperature
-20°C ~ +70°C

Life Expectancy
60,000 Hours (L10 at 35°C)

Available Options
PWM Speed Control Input
Tachometer Output
Alarm Output
5V DC Versions
IP and Salt Fog Ratings

Weight: 0.14 lbs.

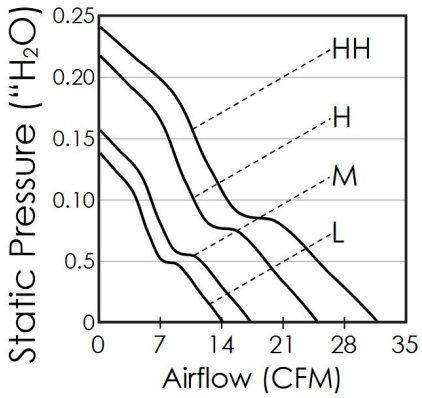

Part Number	Rated Voltage (Volts DC)	Voltage Range (Volts DC)	Input Power (Watts)	Rated Current (Amps)	Rated Speed (RPM)	Airflow (CFM)	Noise Level (dBA)	Max. Static Pressure ("H_2O)
OD6025-12HHSS	12	8 ~ 13.8	1.8	0.21	4390	32	32	0.24"
OD6025-12HSS	12	8 ~ 13.8	1.8	0.15	3975	25	30	0.22"
OD6025-12MSS	12	8 ~ 13.8	1.5	0.12	3150	17	25	0.16"
OD6025-12LSS	12	8 ~ 13.8	1.0	0.08	2480	14	20	0.14"
OD6025-24HHSS	24	15 ~ 26	2.8	0.15	4390	32	32	0.24"
OD6025-24HSS	24	15 ~ 26	2.8	0.12	3975	25	30	0.22"
OD6025-24MSS	24	15 ~ 26	2.2	0.09	3150	17	25	0.16"
OD6025-24LSS	24	15 ~ 26	1.5	0.06	2480	14	20	0.14"
OD6025-48HHSS	48	28 ~ 52	3.4	0.10	4390	32	32	0.24"
OD6025-48HSS	48	28 ~ 52	3.4	0.07	3975	25	30	0.22"

Knight Electronics, Inc.
10557 Metric Drive
Dallas, TX 75243
214-340-0265

Revised 10/8/2024
m0

Orion Fans
Information and data is subject to change without prior notification

OD6025 Sealed Sleeve Series with PWM

DC Fans - 12, 24, 48V
60mm x 25mm (2.4" x 1.0")

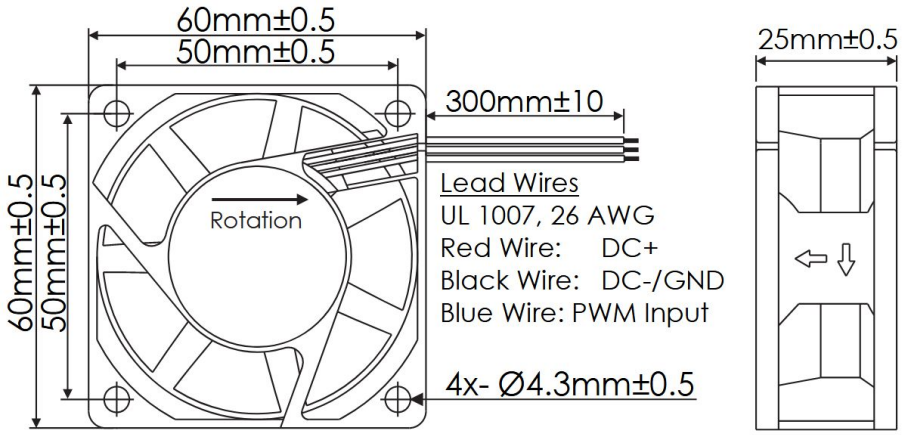

Frame	PBT, UL94 V-0 Plastic
Impeller	PBT, UL94 V-0 Plastic
Connection	3x Lead Wires, 26 AWG
Motor	Brushless DC, Auto Cutoff, Auto Restart, Polarity Protected, Electronically Protected
Bearing System	Sealed Sleeve
Dielectric Strength	500VDC/min, <1mA
Insulation Resistance	≥10MΩ @ 500 VDC

Operating Temperature
-20°C ~ +65°C

Storage Temperature
-20°C ~ +70°C

Life Expectancy
60,000 Hours (L10 at 35°C)

Installed Options
PWM Speed Control Input

Weight: 0.14 lbs.

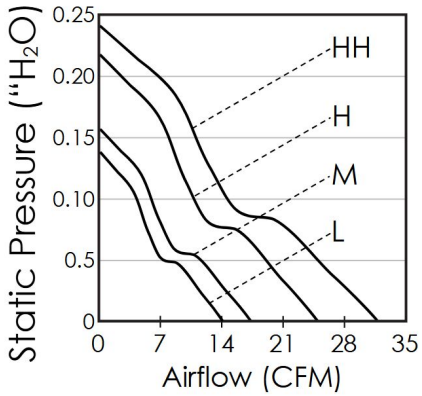

Part Number	Rated Voltage (Volts DC)	Voltage Range (Volts DC)	Input Power (Watts)	Rated Current (Amps)	Rated Speed (RPM)	Airflow (CFM)	Noise Level (dBA)	Max. Static Pressure ("H_2O)
OD6025-12HHSS05	12	8 ~ 13.8	1.8	0.21	4390	32	32	0.24"
OD6025-12HSS05	12	8 ~ 13.8	1.8	0.15	3975	25	30	0.22"
OD6025-12MSS05	12	8 ~ 13.8	1.5	0.12	3150	17	25	0.16"
OD6025-12LSS05	12	8 ~ 13.8	1.0	0.08	2480	14	20	0.14"
OD6025-24HHSS05	24	15 ~ 26	2.8	0.15	4390	32	32	0.24"
OD6025-24HSS05	24	15 ~ 26	2.8	0.12	3975	25	30	0.22"
OD6025-24MSS05	24	15 ~ 26	2.2	0.09	3150	17	25	0.16"
OD6025-24LSS05	24	15 ~ 26	1.5	0.06	2480	14	20	0.14"
OD6025-48HHSS05	48	28 ~ 52	3.4	0.10	4390	32	32	0.24"
OD6025-48HSS05	48	28 ~ 52	3.4	0.07	3975	25	30	0.22"

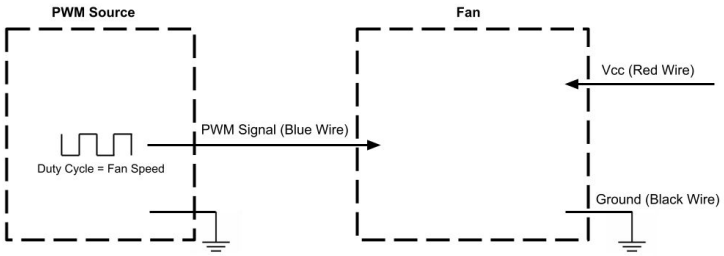

PWM Max High Voltage:	5V
PWM Max Sink Current:	5mA
PWM Frequency Range:	1KHz-100KHz
PWM Typical Frequency:	25KHz
RPM at 0% Duty Cycle:	0 RPM

RPM will be full speed if PWM input is disconnected.
RPM will be 0 RPM if PWM input is grounded.

Knight Electronics, Inc.
10557 Metric Drive
Dallas, TX 75243
214-340-0265

Revised 10/8/2024
m0

Orion Fans
Information and data is subject to change without prior notification

OD6025 Sealed Sleeve Series with PWM and Tach

DC Fans - 12, 24, 48V
60mm x 25mm (2.4" x 1.0")

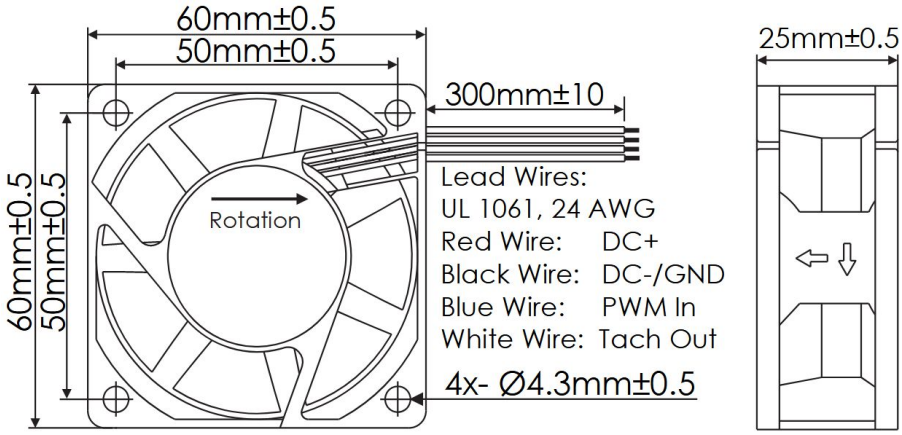

Frame	PBT, UL94 V-0 Plastic
Impeller	PBT, UL94 V-0 Plastic
Connection	4x Lead Wires, 24 AWG
Motor	Brushless DC, Auto Cutoff, Auto Restart, Polarity Protected, Electronically Protected
Bearing System	Sealed Sleeve
Dielectric Strength	500VDC/min, <1mA
Insulation Resistance	≥10MΩ @ 500 VDC

Operating Temperature
-20°C ~ +65°C

Storage Temperature
-20°C ~ +70°C

Life Expectancy
60,000 Hours (L10 at 35°C)

Installed Options
PWM Speed Control Input
Open Collector Tach Output

Weight: 0.14 lbs.

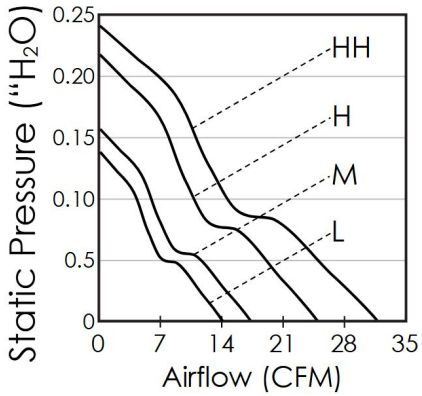

Part Number	Rated Voltage (Volts DC)	Voltage Range (Volts DC)	Input Power (Watts)	Rated Current (Amps)	Rated Speed (RPM)	Airflow (CFM)	Noise Level (dBA)	Max. Static Pressure ("H_2O)
OD6025-12HHSS10A	12	8 ~ 13.8	1.8	0.21	4390	32	32	0.24"
OD6025-12HSS10A	12	8 ~ 13.8	1.8	0.15	3975	25	30	0.22"
OD6025-12MSS10A	12	8 ~ 13.8	1.5	0.12	3150	17	25	0.16"
OD6025-12LSS10A	12	8 ~ 13.8	1.0	0.08	2480	14	20	0.14"
OD6025-24HHSS10A	24	15 ~ 26	2.8	0.15	4390	32	32	0.24"
OD6025-24HSS10A	24	15 ~ 26	2.8	0.12	3975	25	30	0.22"
OD6025-24MSS10A	24	15 ~ 26	2.2	0.09	3150	17	25	0.16"
OD6025-24LSS10A	24	15 ~ 26	1.5	0.06	2480	14	20	0.14"
OD6025-48HHSS10A	48	28 ~ 52	3.4	0.10	4390	32	32	0.24"
OD6025-48HSS10A	48	28 ~ 52	3.4	0.07	3975	25	30	0.22"

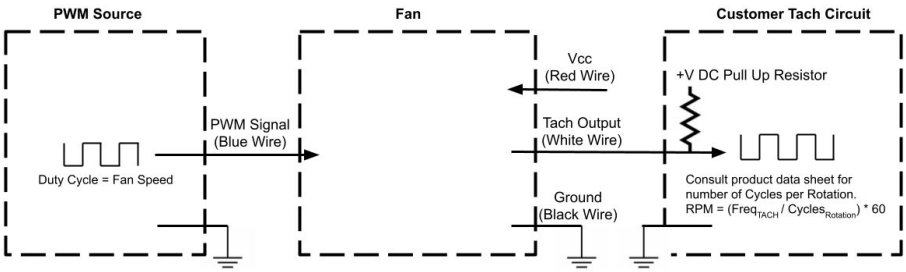

Tach Max Pullup Voltage:	Fan Vcc
Tach Max Sink Current:	8mA
Tach Cycles per Rotation:	2
PWM Max High Voltage:	5V
PWM Max Sink Current:	5mA
PWM Frequency Range:	1KHz-100KHz
PWM Typical Frequency:	25KHz
RPM at 0% Duty Cycle:	0 RPM

RPM will be full speed if PWM input is disconnected.
RPM will be 0 RPM if PWM input is grounded.

Knight Electronics, Inc.
10557 Metric Drive
Dallas, TX 75243
214-340-0265

Revised 10/8/2024
m0

Orion Fans
Information and data is subject to change without prior notification