DO NOT SCALE THIS DRAWING	DRAWING NO: iW-AFHK-BKAT-SSA0	SHEET 1 OF 1

Ordering Part Number: iW-AFHK-BKAT-SSA0

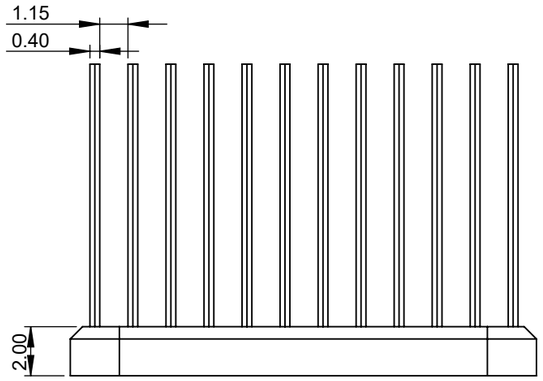

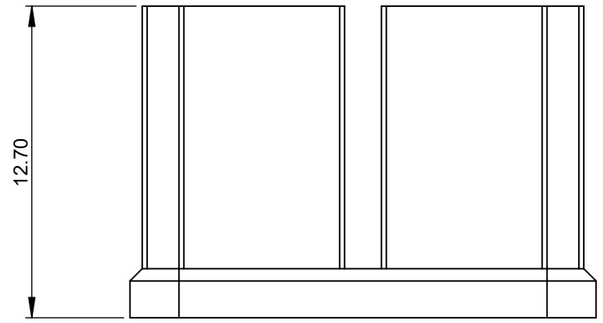

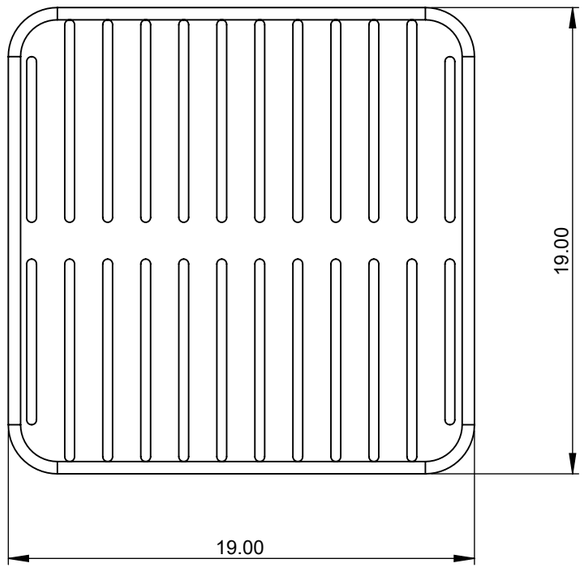

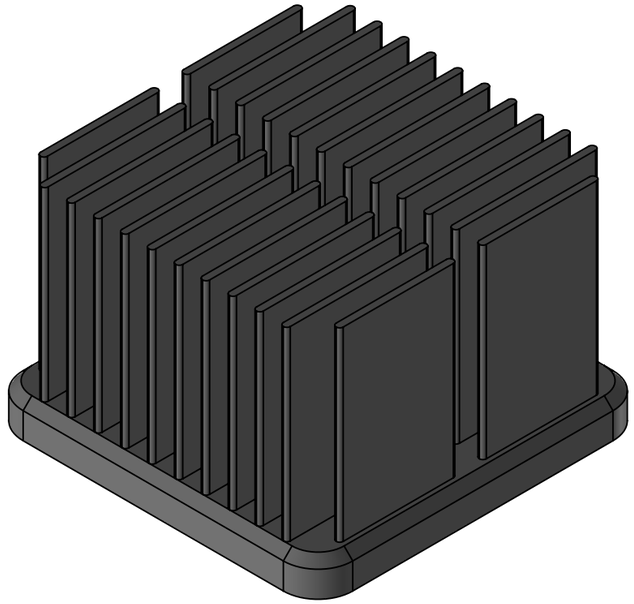

NOTE:

1. Heatsink comes with thermal tape attached.
2. Please remove liner present on thermal tape before pasting onto package.
3. Thermal resistance 4.00°C/W @ 200 LFM
4. Shelf Life :24 Months

RELEASE HISTORY			
REL.	DESCRIPTION	DATE	BY
1.0	INITIAL RELEASE	12-01-2022	GANGADHAR

NOTES:
ALL DIMENSIONSARE IN MM.
ROUND OFF ALL SHARP EDGES.

SCALE: 1:1

RANGE	TOLERANCE A	TOLERANCE B
< 6	±0.05	±0.1
6-30	±0.1	±0.2
30-120	±0.15	±0.3
121-400	±0.2	±0.5

DRAWN BY	GANGADHAR	
CHECKED BY	SHAMEEM	
APPROVED BY	IMMANUEL	

THIS DRAWING SHEET IS PROPERITORY OF iWAVE SYSTEMS TECHNOLOGIES Pvt. Ltd.

iWave Embedding Intelligence

iWave System Technologies Private Limited,
7/B, 29th Main, BTM Layout, 2nd Stage,
Bangalore-560076, India.

DRAWING NO:	iW-AFHK-BKAT-SSA0		
MATERIAL :	AL-6063 alloy	WEIGHT: 4.10	In grams.
FINISH :	Black Anodized	SUR AREA: 5064.75	In sqr.mm
TITLE:	19-19 Forged Generic Heatsink	REV: 1.0	REL: 1.0
DATE :	12 JAN 2022	SHEET 1 OF 1	