ITEM NO.	PART NUMBER	DESCRIPTION	QTY.	COMPONENT NOTES
1	54-00319	Connector, 5 pin M8 B-code socket, 8x18.4 mm, gold plated, panel mount, solder cup, IP67	1	nut and o-ring included
2	Wire	Wire, hook-up, TS, 24 AWG, UL 11028, 600V, 105C, 1.1 mm, mPPE	5	color: brown, white, blue, black, gray
3	Heat shrink	Heat shrink, UL, black	5	covers solder joints

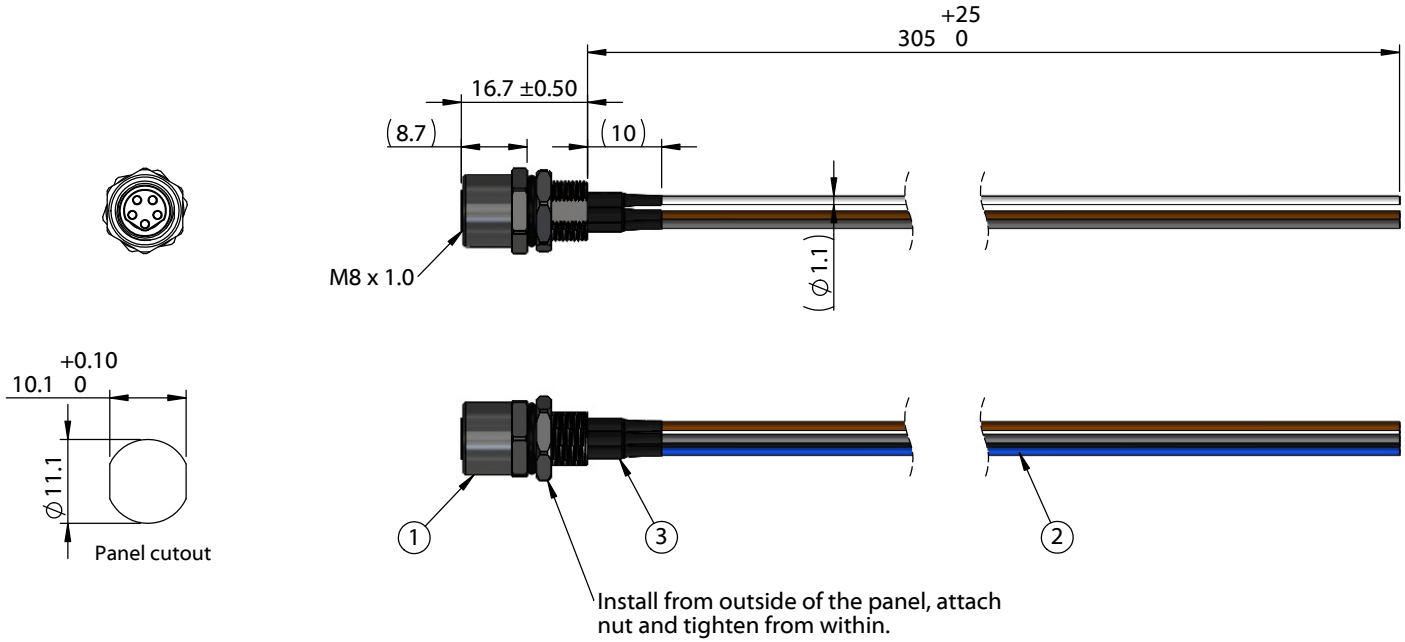

Notes:
Cable rated for 30 V, 3 A
Temperature: -40 ~ 105 °C

IP67 waterproof rating when mated with corresponding (IP67) connector and installed properly in panel

Cables individually packaged in PE bag
Functionally equivalent components may be substituted

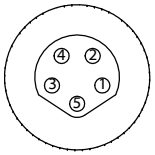

Front View
Not to Scale

Wiring Diagram	
54-00319	wire color (P/N)
1	brown (30-01771)
2	white (30-01764)
3	blue (30-01766)
4	black (30-01763)
5	gray (30-01770)

Revision:	Date:	Description:
A	3/14/2023	Initial release

Prepared: PB Digitally signed by PB Date: 2023.03.16 10:48:18 -07'00'

Verified: MP Digitally signed by MP Date: 2023.04.20 11:13:50 -07'00'

Dimensions are in millimeters.
Tolerances:
X: ± 0.5 mm
X.X: ± 0.3 mm
X.XX: ± 0.05 mm

Notes:

RoHS compliant

Function test: no open, no short circuit, no intermittent

Description:
Cable, 305 mm, M8 5C socket panel mount 54-00319 to blunt cut, 24 AWG, UL 11028 hook-up wire

TENSILITY
tel 1.541.323.3228 800 877.670.7118
fax 1.541.323.4202 web tensility.com

Size: A
Part number: 10-05397
Scale: 1:1
Sheet 1 of 1

5 4 3 2 1

To see a custom version of this cable assembly, call Tensility at 541-323-3228 or email engineering@tensility.com