5P	PVC	5.7	22	MSBS-05BMMM-PL8DXX
Contacts	Cable Jacket	Cable OD	AWG	Item No.

REV.	ECN NO.	DATE	SIGN	DESCRIPTION
A		2022/09/21	Sam Ho	Rev.01 to A, Initial Released
B	C230011	2023/01/05	Vicky	B X1

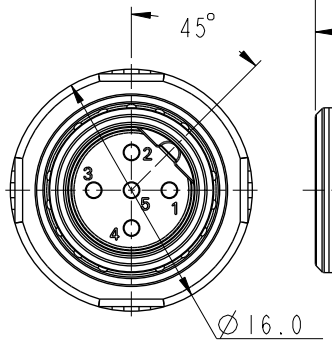

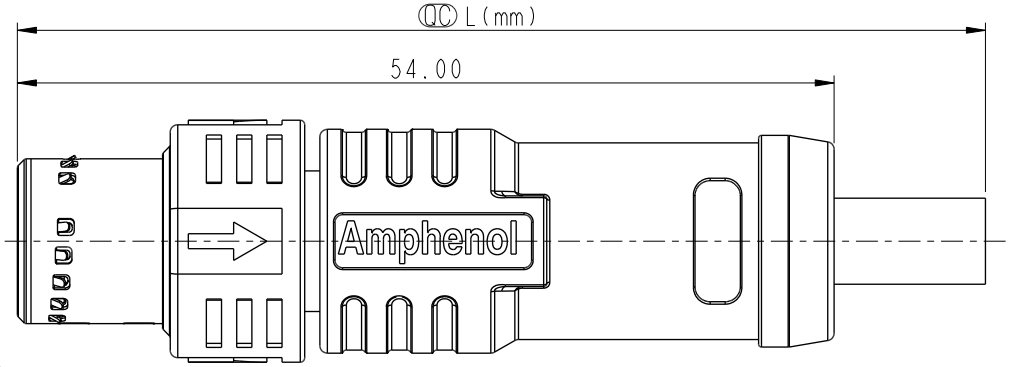

MSBS- XX BMMM-PL8D XX

XX: No. Of Pin

XX:L=0~99Meters
01:L=1Meters
02:L=2Meters
:
99:L=99Meters

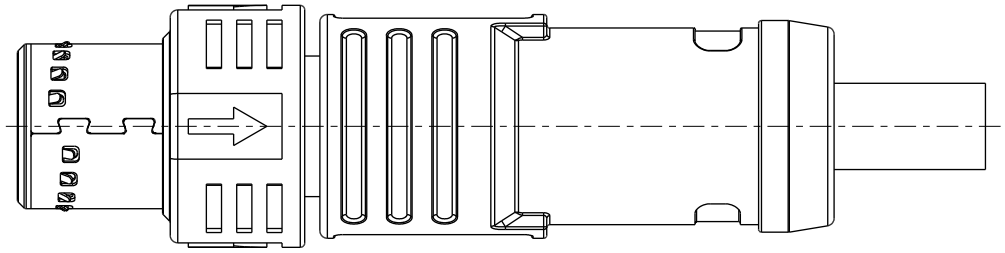

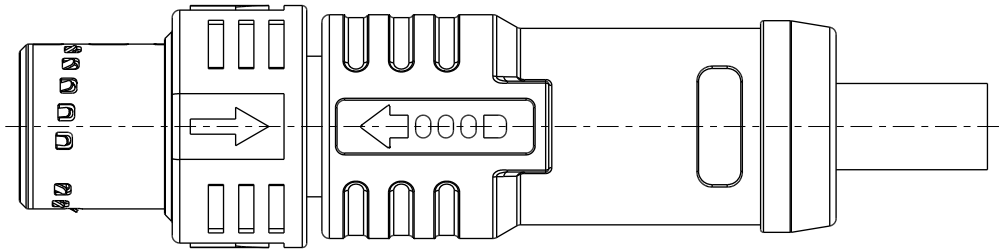

Shield		Braid
5	Gray	灰
4	Black	黑
3	Blue	藍
2	White	白
1	Brown	棕
Pin #		Wire

Pin Out

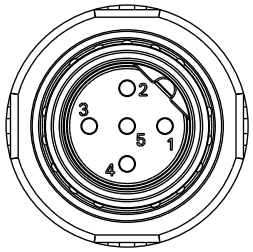

5 Pin

Pin Assignments Front View

Note:
* QC Important Dimension
B * Waterproof Rate: IP68, Mated 1m/24h
* Connector
  * Housing: Thermoplastic, UL94V-0, Black.
  * Male Pin: Copper Alloy, Gold Plated.
  * Shell & Latch & Spring & Shield: Matal.
  * Outer Mold: Thermoplastic, Black.
  * Cable: PVC UL2517 Cable, Black.
* Cable Length Tolerance: 1M: +50/-0 mm
  1M < L ≦ 3M: +100/-0 mm
  3M < L ≦ 5M: +150/-0 mm
  5M < L ≦ 10M: ±100 mm
  10M < L ≦ 20M: ±200 mm
  20M < L ≦ 30M: ±300 mm
  30M < L ≦ 99M: ±500 mm

UNIT:mm

TOLERANCE
±0.50mm

TITLE: N SEN, M12 B -SHLD, PUSH PULL CABLE W/O SR, M, M, MOLDING

SCALE: 2:1 | SIZE: A4 | SHEET 1 OF 1

REV.: B | WC-REV.:

QC: Inspection item

Amphenol LTW
安費諾亮泰企業股份有限公司

ITEM NO	DRAWN BY	DATE
	Sam Ho	2022-09-21
DWG NO: MSBS-XXBMMM-PL8DXX	CHECKED BY: Fred Lee	DATE: 2022-09-21
CUSTOMER: ALTW	APPROVED BY: Fred Lee	DATE: 2022-09-21

W10814-03-RW01A2

THIS DOCUMENT IS SUBJECT TO CHANGE WITHOUT NOTICE. IT IS CONFIDENTIAL AND A PROPERTY OF Amphenol LTW. DISCLOSURE TO THIRD PARTY HAS TO BE AUTHORIZED BY Amphenol LTW.