REV.	ECN NO.	DATE	SIGN	DESCRIPTION
G	C210239	2021/04/13	Ruru	G X4
H	C221878	2022/12/19	Ruru	H X1
I	C231031	2023/08/04	Ruru	I X1

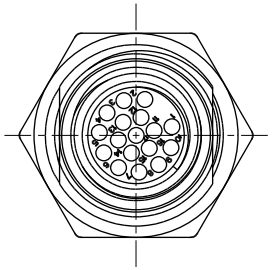

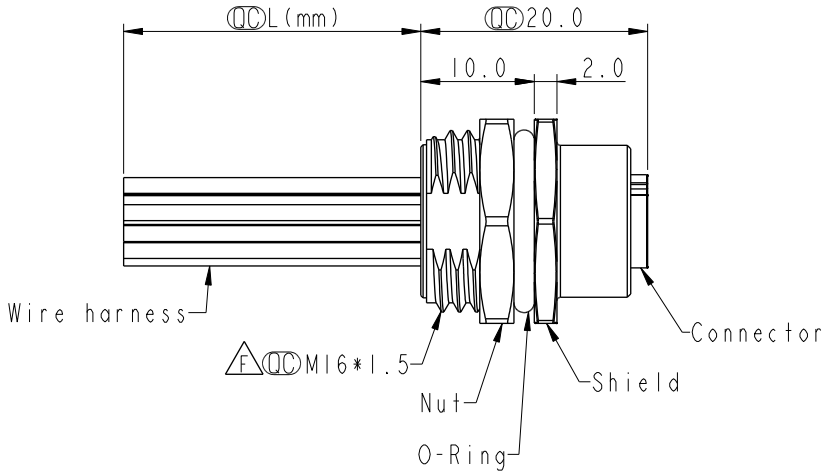

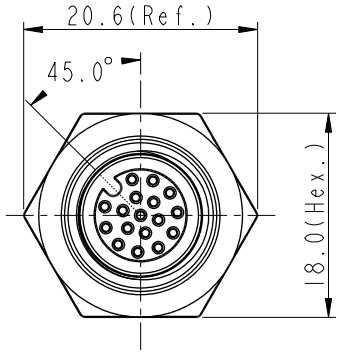

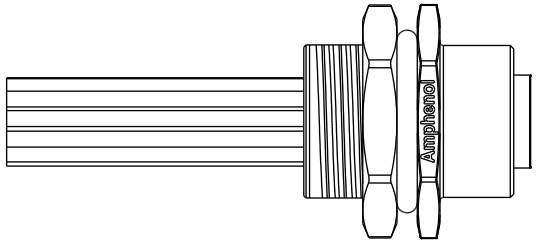

Note: C D E F G

* RoHS Compliant
* QC Important dimension
* H Waterproof rate: IP68, unmated 1m/24h
  I IP69K, mated
* Connector
  Housing: Thermoplastic, Black
  Pin: Copper alloy, Gold plated
  O-Ring: Rubber, Green
* Shield: Metal
* Nut: Metal
* O-Ring: Rubber, Black
* Wire harness: UL1061
* For panel thickness max: 4.5mm
* O-Ring and nut are assembled on connectors
* Wire harness tolerance: 100mm: ±10mm
  100mm < L ≦ 300mm: ±15mm
  300mm < L ≦ 1000mm: ±20mm
  1000mm < L ≦ 1500mm: ±50mm

F

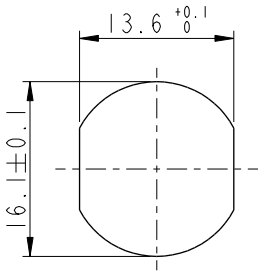

Recommended
Panel Cut-Out

UNIT: mm

TOLERANCE
.X ±0.25
.XX ±0.1
.XXX ±0.05
ANGLES ±1°

TITLE	N SEN, M12 A, SCREW RECEPTACLE, F, F, F1/PANEL CRIMP G		
SCALE 3:2	SIZE A4	SHEET 1 OF 2	
REV. 1	WC-REV. A.3	QC: Inspection item	

Amphenol LTW
安費諾亮泰企業股份有限公司

ITEM NO	DRAWN BY Ruru	DATE 2019-09-19
DWG NO F M12A-XXPFFC-SH8CXX	CHECKED BY Rita	DATE 2019-09-19
CUSTOMER ALTW	APPROVED BY Max	DATE 2019-09-19

W10814-03-[redacted]01A2

THIS DOCUMENT IS SUBJECT TO CHANGE WITHOUT NOTICE. IT IS CONFIDENTIAL AND A PROPERTY OF Amphenol LTW. DISCLOSURE TO THIRD PARTY HAS TO BE AUTHORIZED BY Amphenol LTW.

	Contacts	AWG	Item No.
C	17P	26	MI2A-17PFFC-SH8CXX
E	5P	22	MI2A-05PFFC-SH8CXX
F	4P		MI2A-04PFFC-SH8CXX
	3P		MI2A-03PFFC-SH8CXX

C D E F G

MI2A-XXPFFC-SH8CXX

XX: No. Of Pin

10:100mm
15:150mm
20:200mm
∫
95:950mm
Cable Pitch Unit=50mm

A0:1000mm
∫
A5:1500mm
Cable Pitch Unit=100mm
Wire Length (L):150~1500 mm

C E F

Pin #	Wire		Pin #	Wire		Pin #	Wire		Pin #	Wire	
5	--		5	--		5	Gray	灰	17	White/Gray	白/灰
4	Black	黑	4	Black	黑	4	Black	黑	16	Yellow/Brown	黃/棕
3	Blue	藍	3	Blue	藍	3	Blue	藍	15	White/Yellow	白/黃
2	--		2	White	白	2	White	白	14	Brown/Green	棕/綠
1	Brown	棕	1	Brown	棕	1	Brown	棕	13	White/Green	白/綠
									12	Red/Blue	紅/藍
									11	Gray/Pink	灰/粉
									10	Violet	紫
									9	Red	紅
									8	Gray	灰
									7	Black	黑
									6	Yellow	黃
									5	Pink	粉
									4	Green	綠
									3	White	白
									2	Blue	藍
									1	Brown	棕

Pin Out

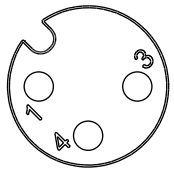

3P

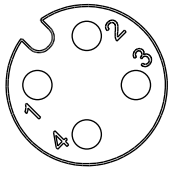

4P

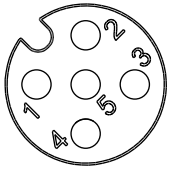

5P

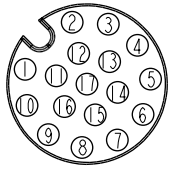

17P

Pin Assignments Front View

UNIT:mm

TOLERANCE
.X ±0.25
.XX ±0.1
.XXX ±0.05
ANGLES ±1°

TITLE: N SEN, MI2 A, SCREW RECEPTACLE, F, F, FI/PANEL CRIMP (G)			
SCALE 3:2	SIZE A4	SHEET 2 OF 2	
REV. 1	WC-REV. A.3	(QC):Inspection item	

Amphenol LTW
安費諾亮泰企業股份有限公司

ITEM NO	DRAWN BY Ruru	DATE 2019-09-19
DWG NO (F) MI2A-XXPFFC-SH8CXX	CHECKED BY Rita	DATE 2019-09-19
CUSTOMER ALTW	APPROVED BY Max	DATE 2019-09-19

W10814-03-[redacted]01A2

THIS DOCUMENT IS SUBJECT TO CHANGE WITHOUT NOTICE. IT IS CONFIDENTIAL AND A PROPERTY OF Amphenol LTW. DISCLOSURE TO THIRD PARTY HAS TO BE AUTHORIZED BY Amphenol LTW.