THIS COPY IS PROVIDED ON A RESTRICTED BASIS AND IS NOT TO BE USED IN ANY WAY DETRIMENTAL TO THE INTERESTS OF PANDUIT CORP.

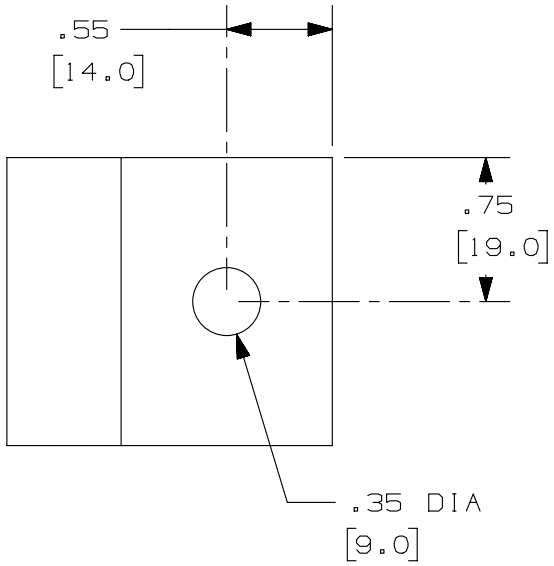

PANDUIT PART NUMBER	APPROXIMATE WEIGHT FOR A PAIR OF BRACKETS
WGVWMB	.16 LB (73g)

NOTES:

1. SEE CURRENT CATALOG FOR PART NUMBER DESIGNATION FOR TYPE AND COLOR.
2. THE WYR-GRID VERTICAL WALL MOUNT BRACKET IS USED FOR MOUNTING WYR-GRID PATHWAY SECTIONS TO A WALL.
3. THE WYR-GRID VERTICAL WALL MOUNT BRACKET PACKAGE CONTAINS CONTAINS A PAIR OF BRACKETS.
4. DIMENSIONS IN PARENTHESES ARE IN METRIC.

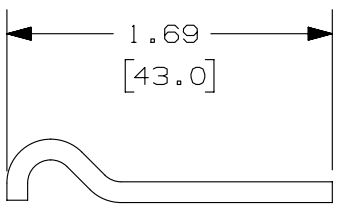

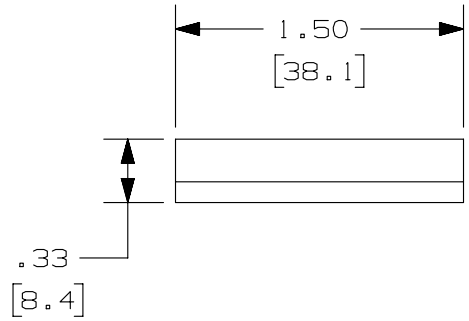

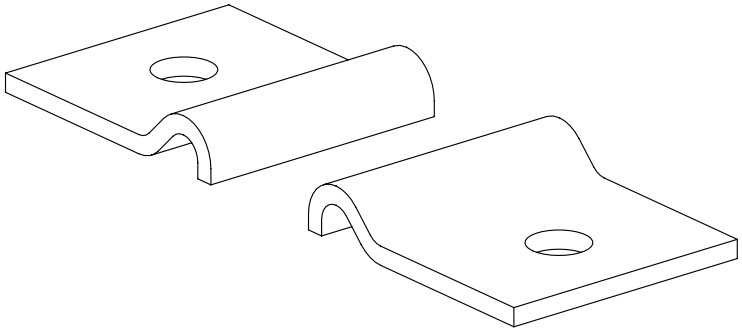

REV	DATE	BY	CHK	APR	DESCRIPTION	ECN
R	04-12-13	SSP	DWW	RN	RELEASED TO PRODUCTION	11D252BC-DC

TITLE

WYR-GRID VERTICAL WALL MOUNT BRACKET (WGVWMB)

CUSTOMER DRAWING

ITEM REVISION NAME: 11D252BC/00

DATASET FILE NAME: 11D252BC_DC/00A WGVWMB**

UNLESS OTHERWISE SPECIFIED, DIMENSIONAL TOLERANCES ARE: IN [mm]

.X ± .XXX ±

.XX ± .03 [.76] ANGLES ± 5 °

THIRD ANGLE PROJECTION

MATERIAL: STEEL

DRAWING NUMBER: 11D252BC-DC

DRAWN BY	DATE	CHK	SCALE	SHT 1 OF 1	SIZE
SSP	04-12-13	DWW	1/1		A