THIS COPY IS PROVIDED ON A RESTRICTED BASIS AND IS NOT TO BE USED IN ANY WAY DETRIMENTAL TO THE INTERESTS OF PANDUIT CORP.

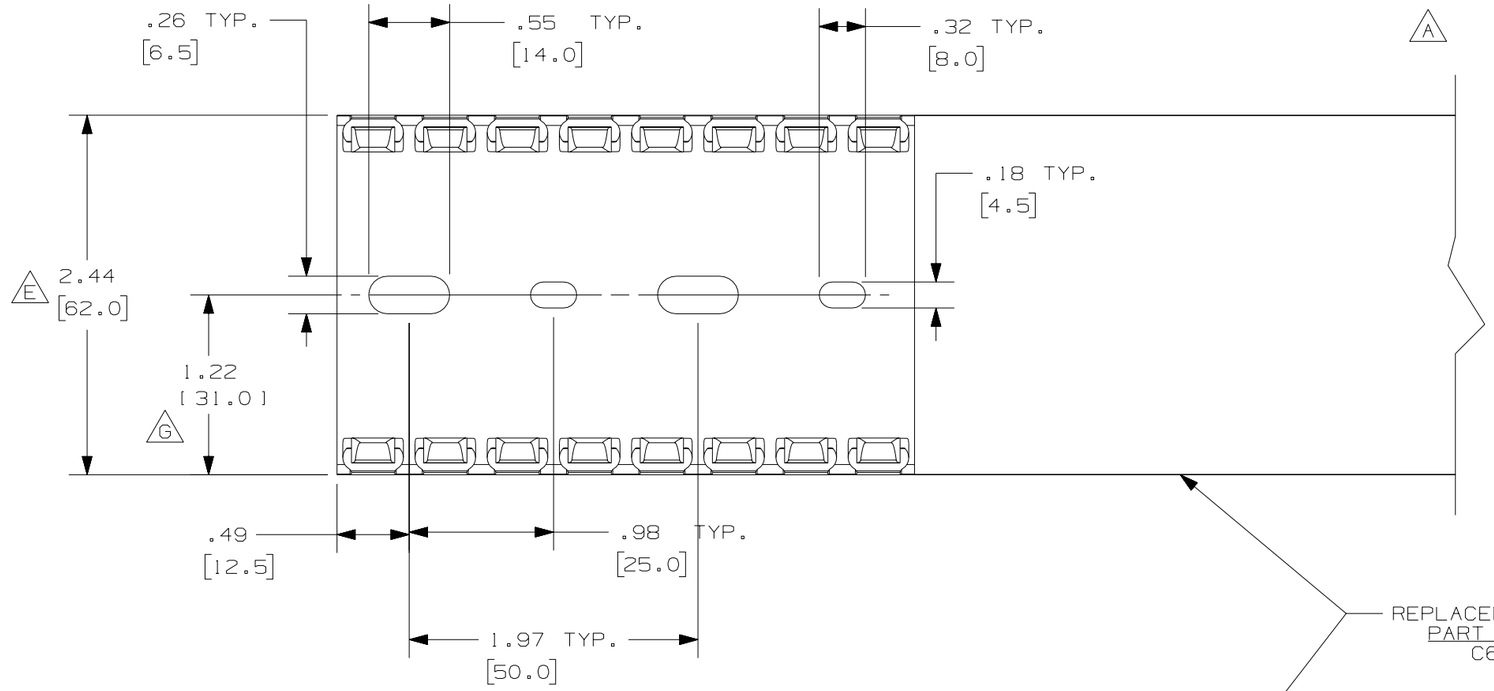

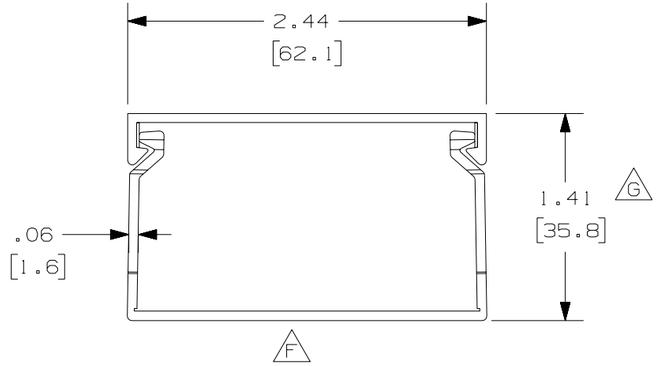

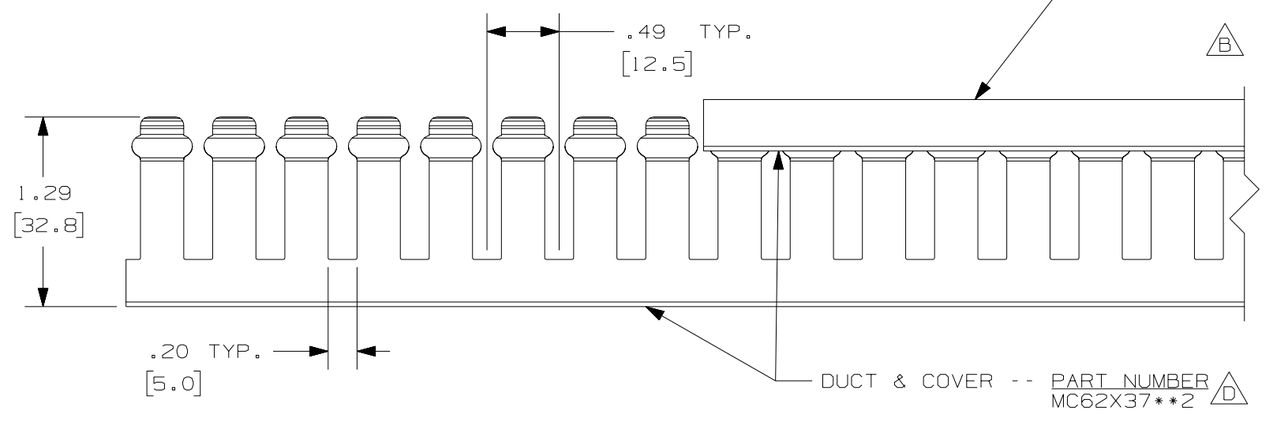

D NOTE.
1. ALL DIMENSIONS ARE REFERENCE ONLY.
H
2. DIMENSIONS IN PARENTHESES ARE METRIC.
3. THE ** DENOTE COLOR.
4. DUCT AND COVER ARE AVAILABLE IN 6.56 FT, 2 METER [2000.0] LENGTHS.

REV	DATE	BY	CHK	DESCRIPTION
--	-------	--	--	H. ADDED LENGTH NOTE G. CORRECTED DIMENSIONS
2	8-8-07	JCST	MKBE	F. DELETED DIMENSION E. ADDED DIMENSION
1	4-15-04	JCST	MKBE	C. CHANGED DRAWING SIZE D. ADDED LABELS & NOTES A. ADDED TOP VIEW B. CHANGED VIEW
R	7-7-03	JHNU	JGG	DRAWING RELEASED

CAD FILENAME/LAYERS: D11000KB_DC_02B

PANDUIT CORP. TINLEY PARK, ILLINOIS

WIRING DUCT - TYPE MC DUCT WITH COVER (62 X 37)
MARKETING DRAWING

DRAWN BY	MAT'L:	SCALE
JHNU	PVC	FULL
DATE 7-7-03		DRAWING NO. 36897-799
CHECKED BY JGG		DWG B SIZE