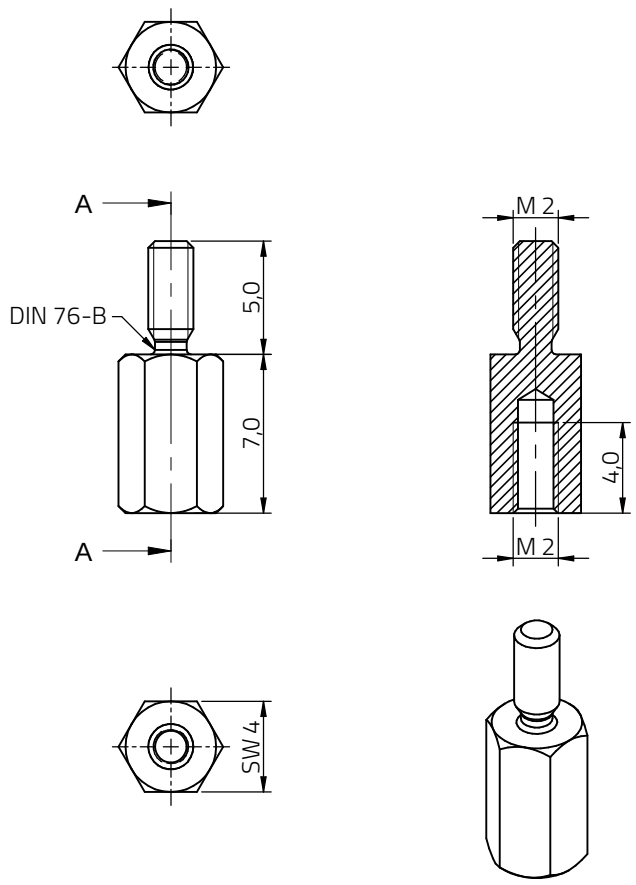

Scale - 3:1

Scale - :1

Scale - :1

REV.	FILE	DATE	BY
1.0	New Drawing	22-09-28	SteB

WURTH ELEKTRONIK MORE THAN YOU EXPECT

Würth Elektronik eiSos GmbH & Co. KG
EMC & Inductive Solutions
Max-Eyth-Str. 1
74638 Waldenburg
Germany
com. +49 (0) 79 42 945 - 0
www.we-online.de
eiSos@we-online.de

CREATED	CHECKED	GENERAL TOLERANCE	PROJECTION METHOD	SCALE
SteB	JPR	DIN ISO 2768-1m		3:1

DESCRIPTION	TECHNICAL REFERENCE	MATERIAL
WA-SBRIE Brass Spacer Stud with Metric Thread, internal/external	---------	Brass, nickel-plated
	ORDER CODE 971070244	

SIZE	WEIGHT	STATUS	DATE	BUSINESS UNIT	REV
M2 x 7,0mm; SW 4	0,85g	Released	2022-09-28	eiCan	1.0

This electronic component has been designed and developed for usage in general electronic equipment only. This product is not authorized for use in equipment where a higher safety standard and reliability standard is especially required or where a failure of the product is reasonably expected to cause severe personal injury or death, unless the parties have executed an agreement specifically governing such use. Moreover Würth Elektronik eiSos GmbH & Co KG products are neither designed nor intended for use in areas such as military, aerospace, aviation, nuclear control, submarine, transportation (automotive control, train control, ship control), transportation signal, disaster prevention, medical, public information network etc.. Würth Elektronik eiSos GmbH & Co KG must be informed about the intent of such usage before the design-in stage. In addition, sufficient reliability evaluation checks for safety must be performed on every electronic component which is used in electrical circuits that require high safety and reliability functions or performance.