THIS COPY IS PROVIDED ON A RESTRICTED BASIS AND IS NOT TO BE USED IN ANY WAY DETRIMENTAL TO THE INTERESTS OF PANDUIT CORP.

NOTES:

1. KIT COMES FULLY ASSEMBLED
2. KIT INCLUDES BUSBAR, MOUNTING BRACKETS, INSULATORS, AND MOUNTING HARDWARE.
3. MEETS BICSI/ANSI/TIA-607-D
4. DIMENSIONS IN PARENTHESIS ARE MILLIMETERS.

C UL US
LISTED
GROUNDING AND BONDING EQUIPMENT

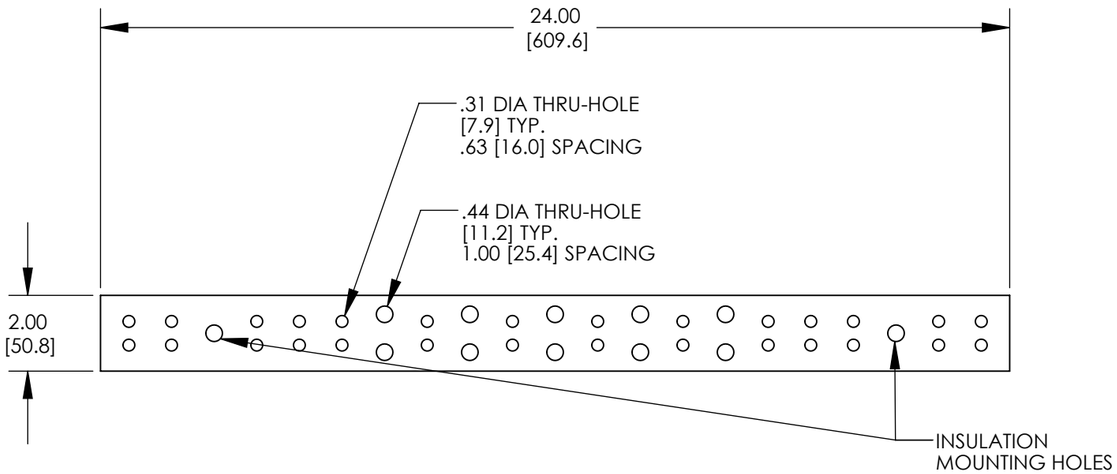

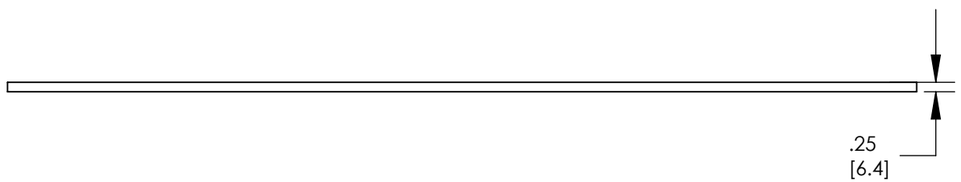

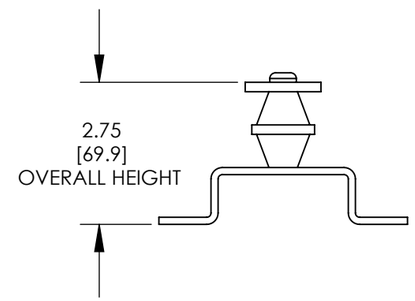

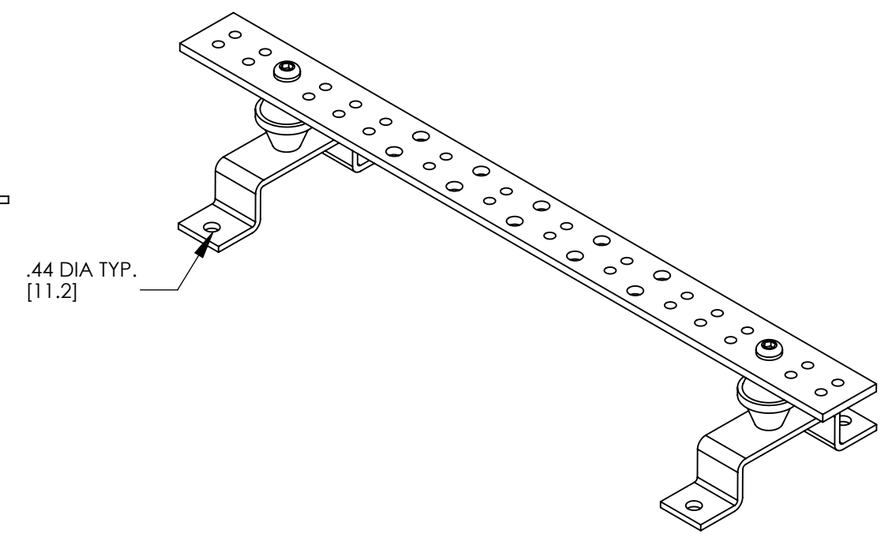

ASSEMBLED AS SHOWN

REV	DATE	BY	CHK	APR	DESCRIPTION	ECN
06	3/22	JHNU	JHNU	ALP	REVISED NOTE 3: MEETS BICSI/ANSI/TIA-607-D WAS MEETS BICSI/J-STD-607-A REVISED TITLE BLOCK	119913

TITLE
TGB BCSI GROUNDING BUSBAR
(GB2B0514TPI)
CUSTOMER DRAWING

ITEM REVISION NAME: N41741BA/06

DATASET FILE NAME: C41741 r06.SLDDRW

PANDUIT

UNLESS OTHERWISE SPECIFIED,
DIMENSIONAL TOLERANCES ARE: IN [mm]
.X ± .XXX ±
.XX ± ANGLES ±
THIRD ANGLE PROJECTION

MATERIAL

DRAWING NUMBER: C41741

DRAWN BY	DATE	CHK	SCALE		SIZE
JHNU	1/08	DWDA	NONE	SHEET 1 OF 1	B