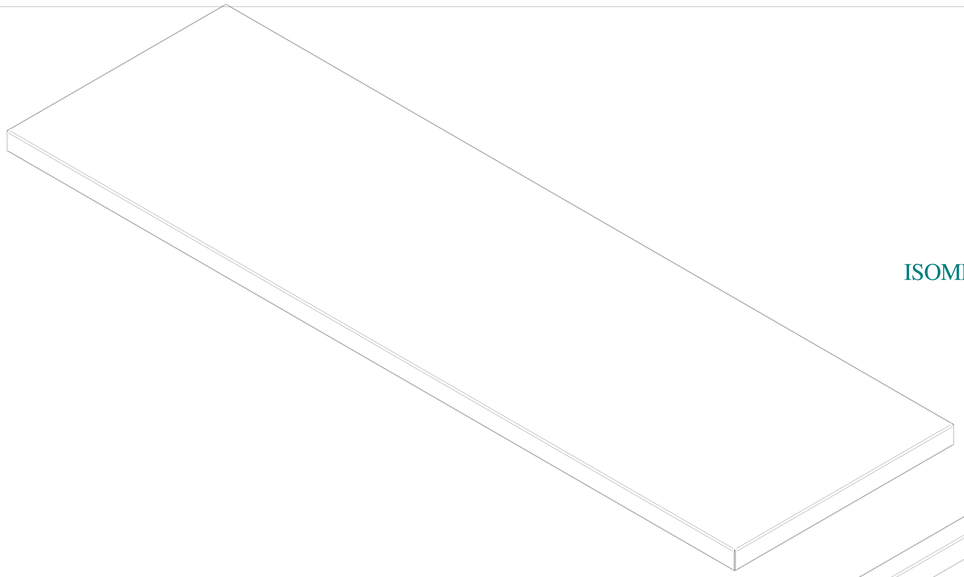

ISOMETRIC VIEWS

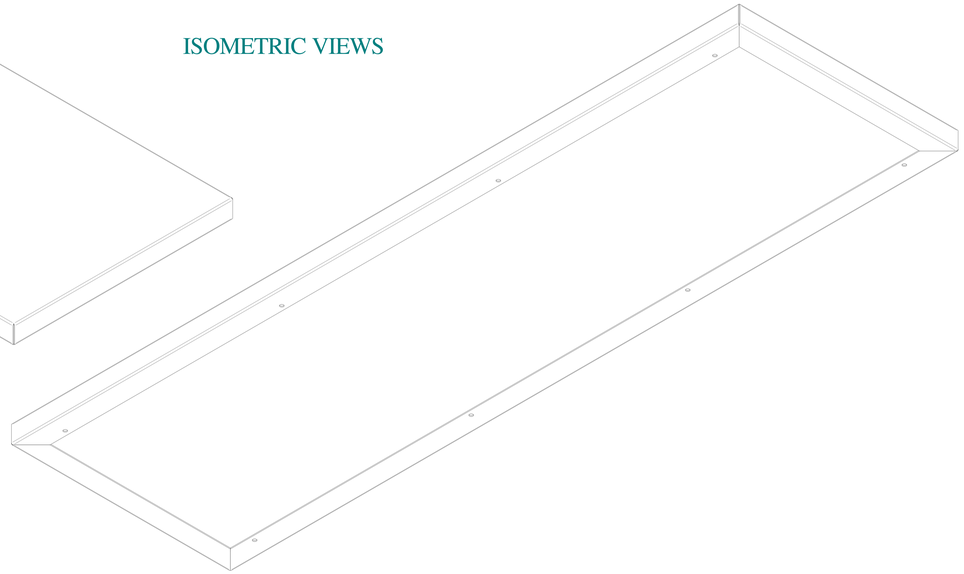

TOP VIEW

SIDE VIEW

FRONT VIEW

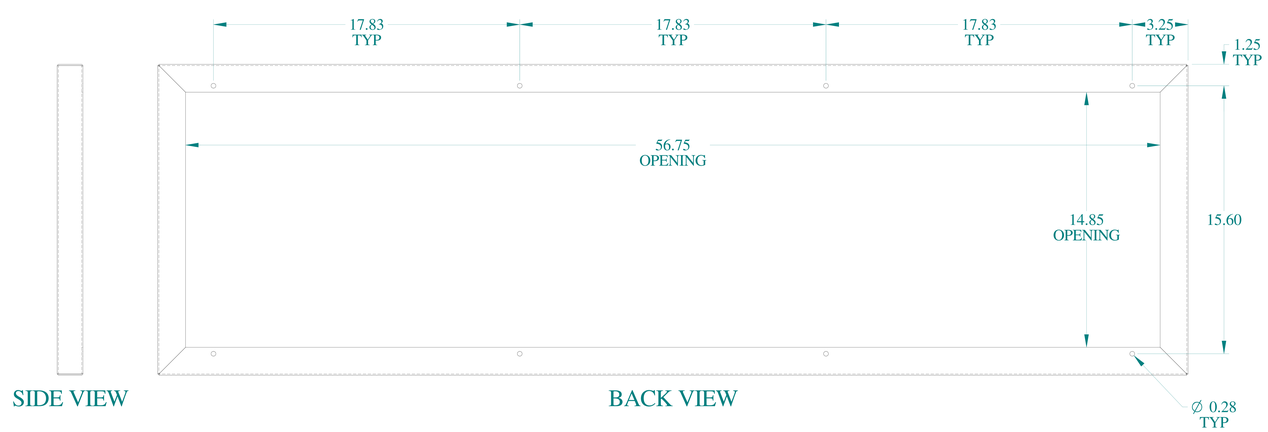

SIDE VIEW

BACK VIEW

BOTTOM VIEW

HAMMOND MANUFACTURING®

www.hammondmfg.com

Data subject to change without notice.

Part # : 2CPBC6036	Date : Mar. 24, 2019

Link:www.hammfg.com/2CPBC6036