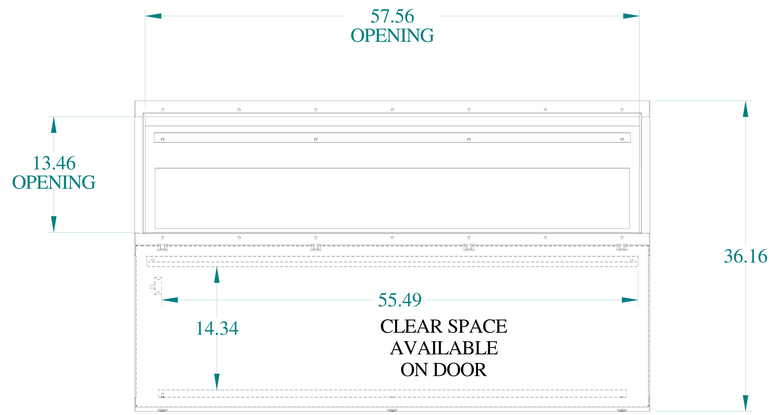


VIEW Z-Z

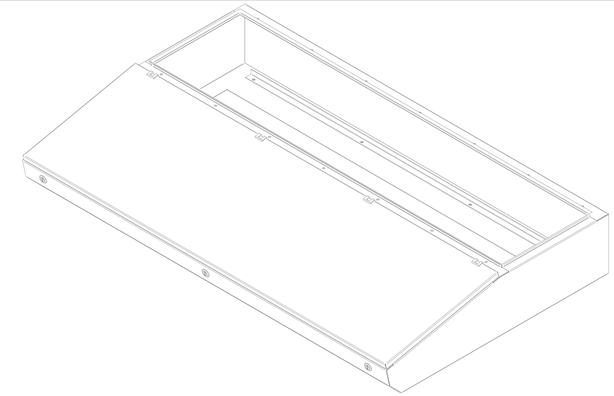

ISOMETRIC VIEWS

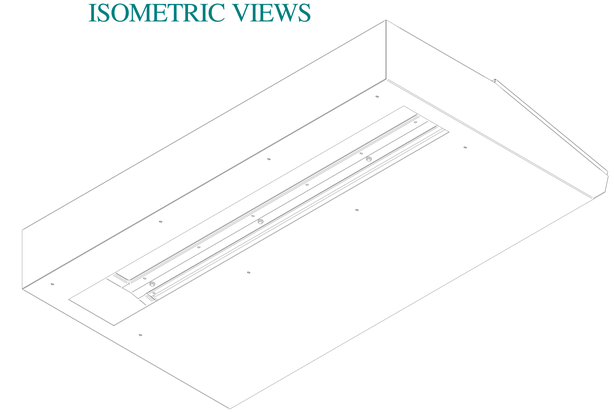

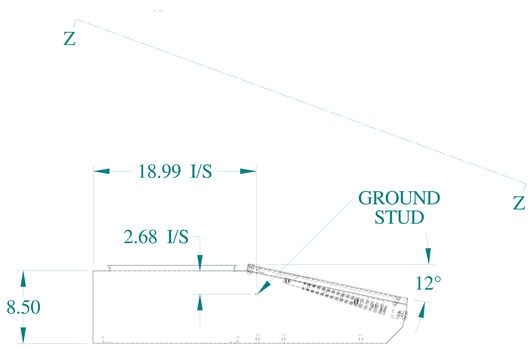


SIDE VIEW

FRONT VIEW

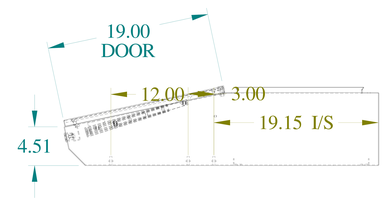


SIDE VIEW

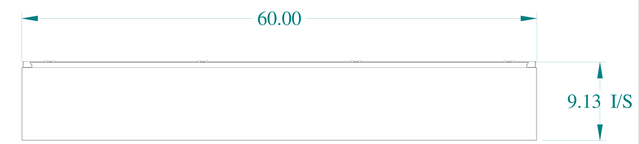


BACK VIEW

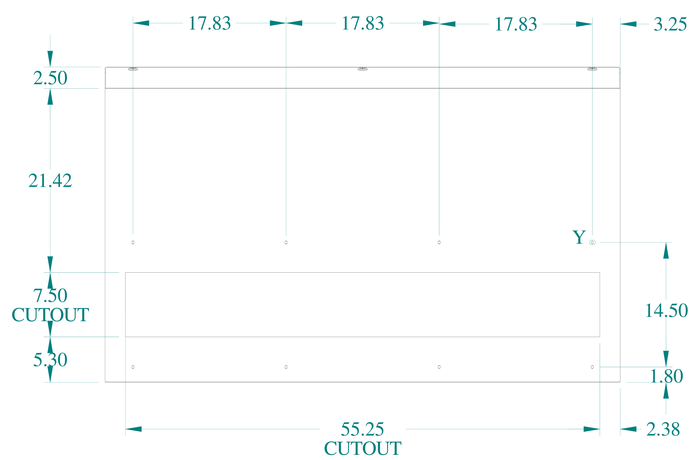


BOTTOM VIEW

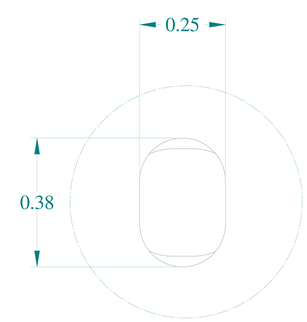


DETAIL Y
TYP

HAMMOND MANUFACTURING®

www.hammondmfg.com

Data subject to change without notice.

| | |
|---|---|
| Part # : 2CPD86036 | Date : Mar. 24, 2019 |

Link:www.hammfg.com/2CPD86036