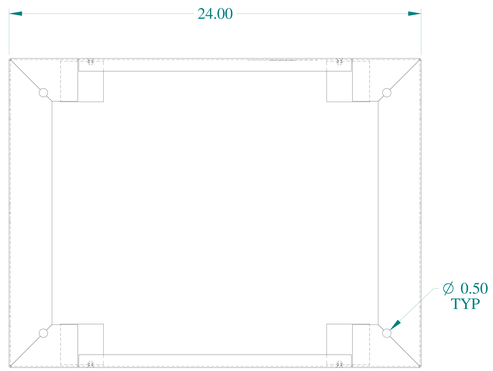

TOP VIEW

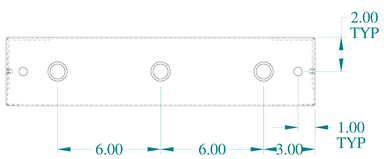

SIDE VIEW

FRONT VIEW

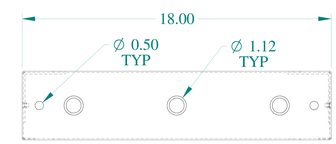

SIDE VIEW

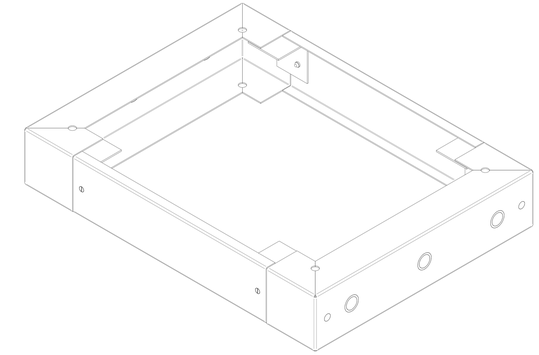

ISOMETRIC VIEWS

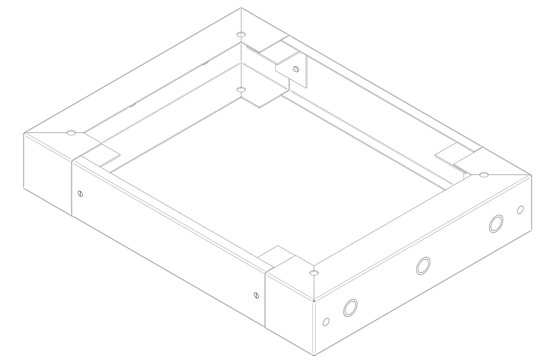

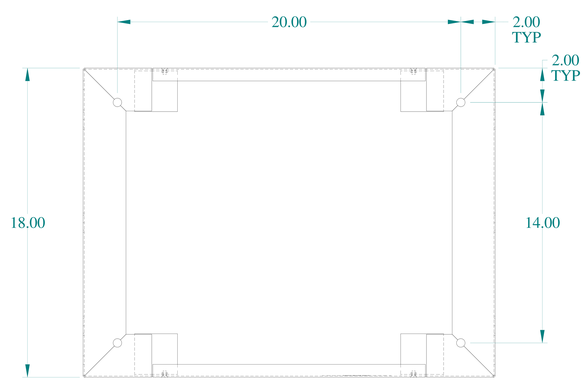

BOTTOM VIEW

HAMMOND MANUFACTURING®

www.hammondmfg.com

Data subject to change without notice.

Part # : 2CPP42418	Date : Mar. 24, 2019

Link:www.hammfg.com/2CPP42418