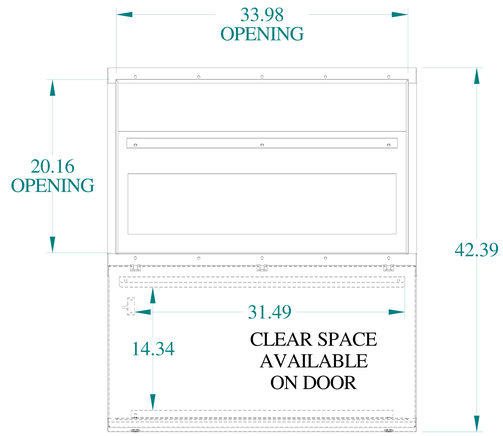

VIEW Z-Z

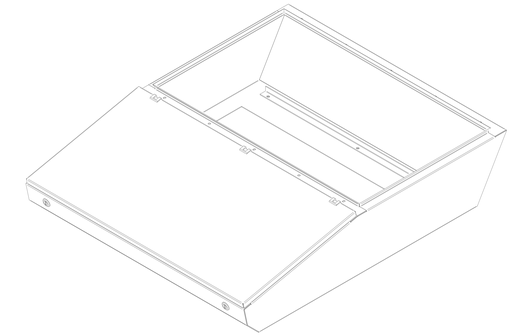

ISOMETRIC VIEWS

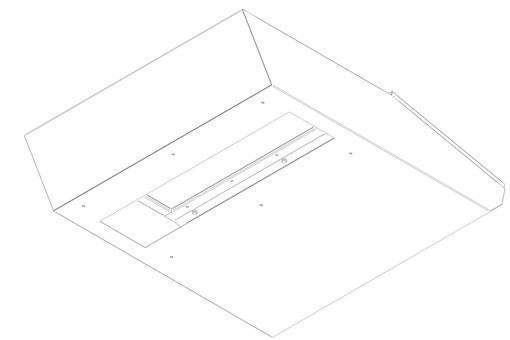

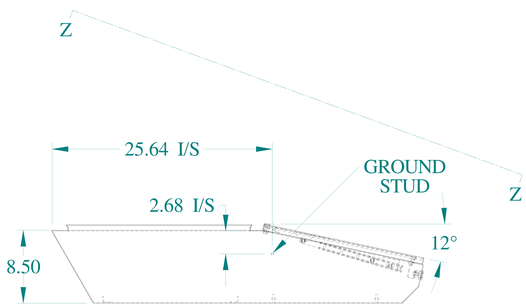

SIDE VIEW

FRONT VIEW

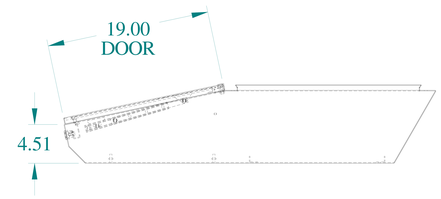

SIDE VIEW

BACK VIEW

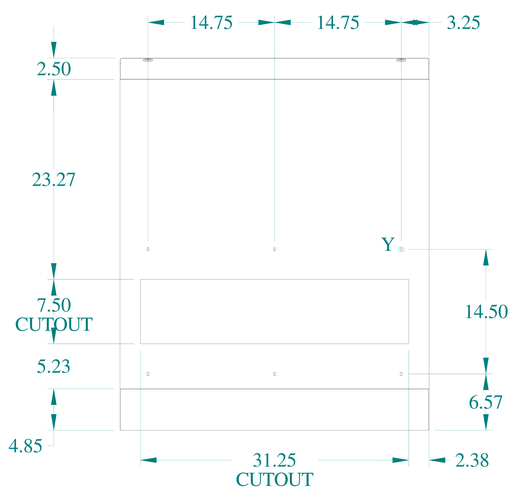

BOTTOM VIEW

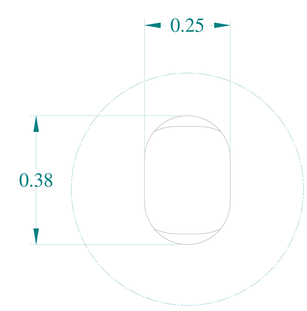

DETAIL Y
TYP

HAMMOND MANUFACTURING®

www.hammondmfg.com

Data subject to change without notice.

Part # : 2CRD83643	Date : Mar. 24, 2019

Link:www.hammfg.com/2CRD83643