TOP VIEW

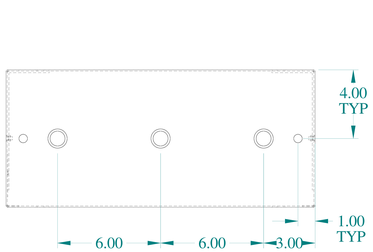

SIDE VIEW

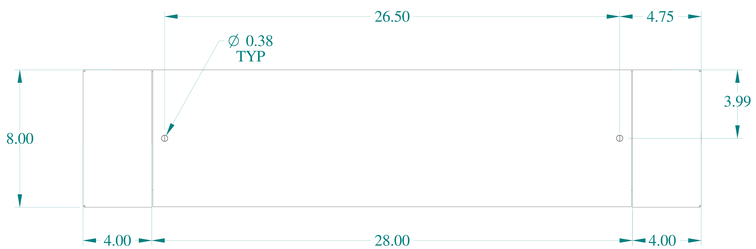

FRONT VIEW

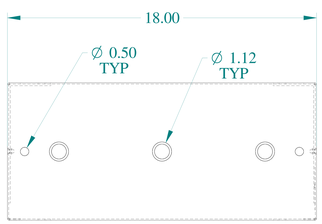

SIDE VIEW

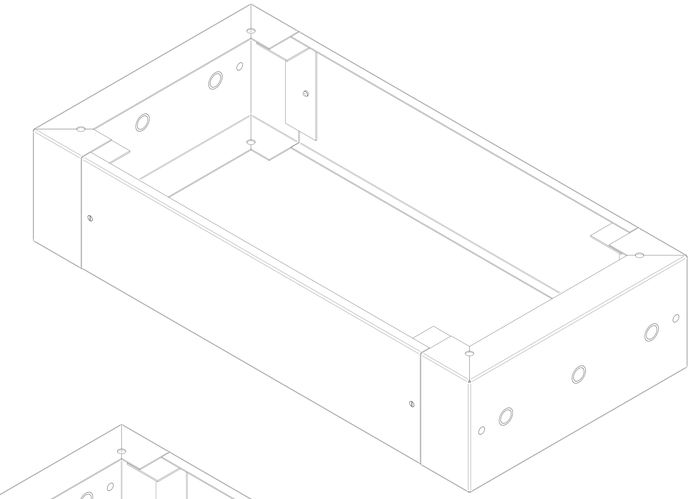

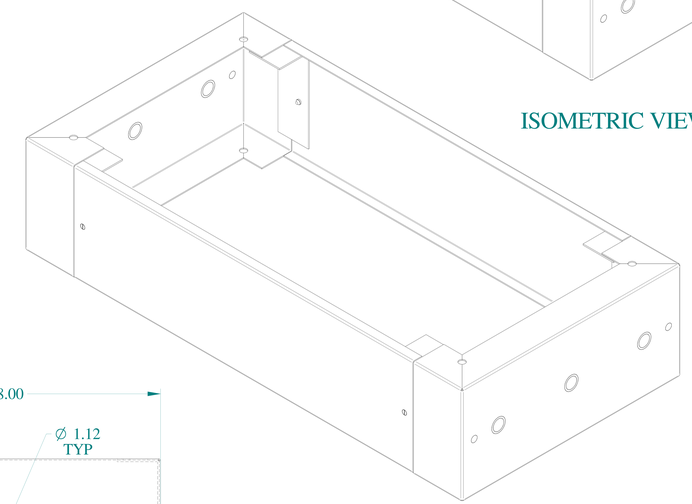

ISOMETRIC VIEWS

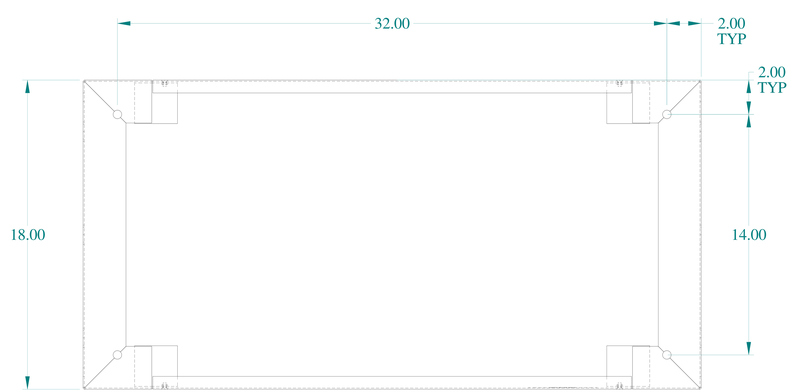

BOTTOM VIEW

HAMMOND MANUFACTURING®

www.hammondmfg.com

Data subject to change without notice.

Part # : 2CRP83618	Date : Mar. 24, 2019

Link:www.hammfg.com/2CRP83618