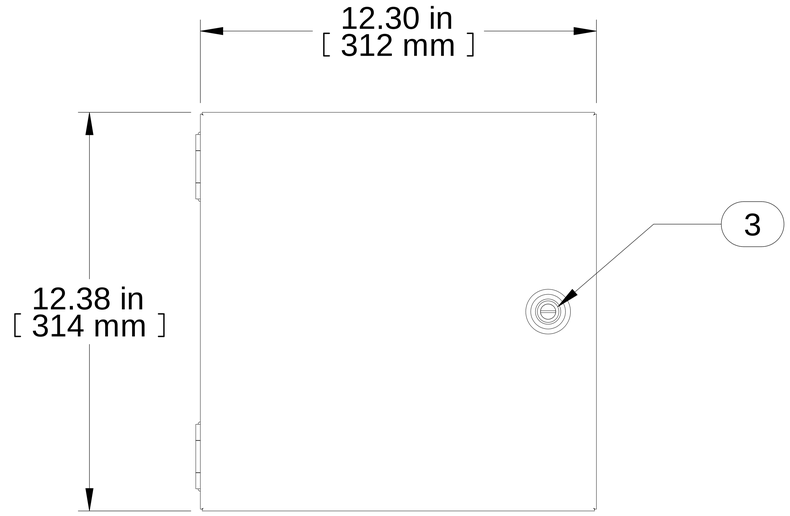


TOP VIEW

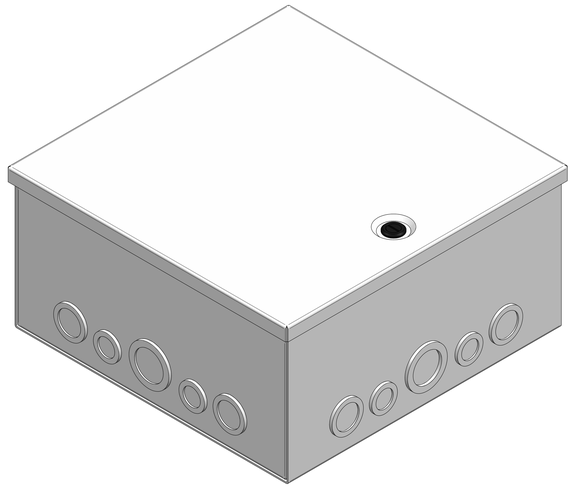

ISOMETRIC

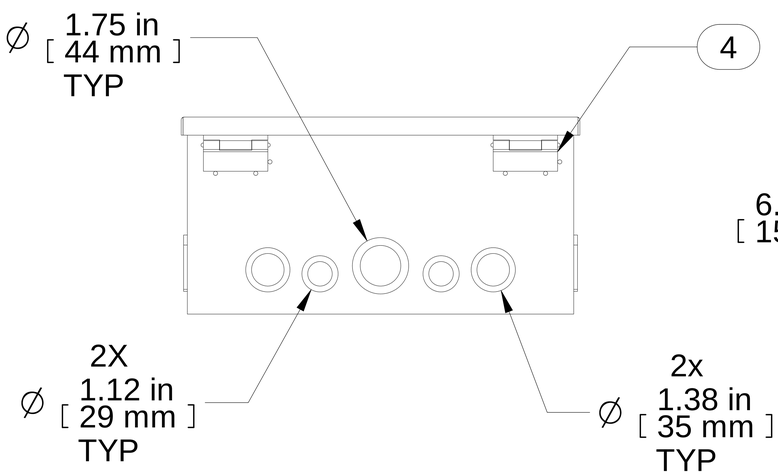


L.S. VIEW

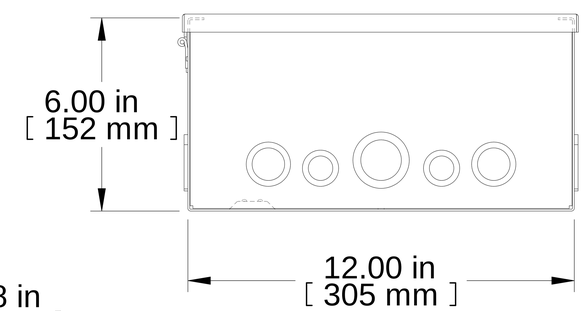


FRONT VIEW

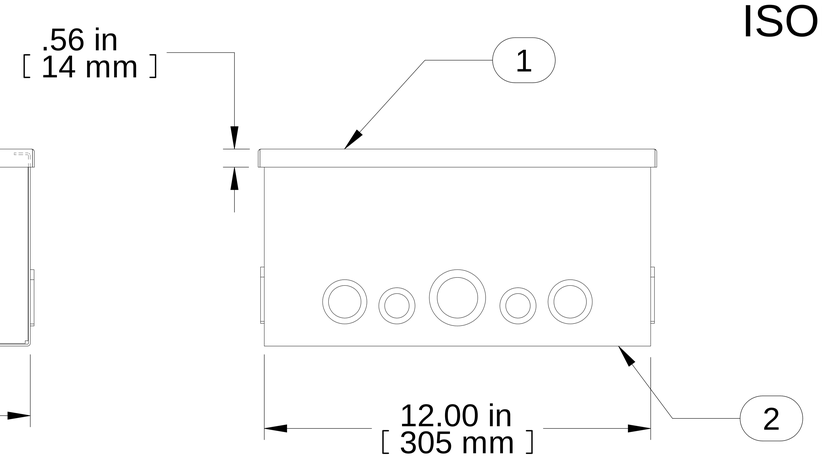


R.S. VIEW

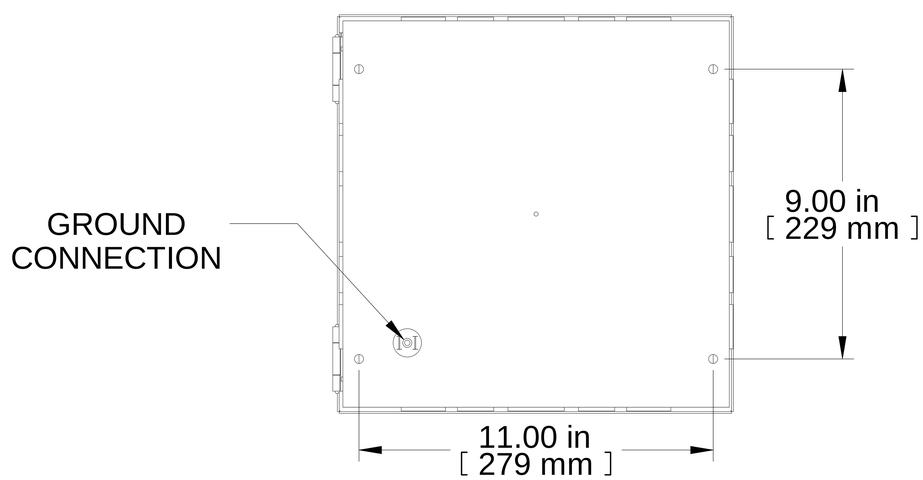


BOTTOM VIEW

| Item Number | Title | Quantity |
|---|---|---|
| 1 | Front Cover | 1 |
| 2 | Back Case | 1 |
| 3 | Quarter Turn Latch | 1 |
| 4 | Door Hinge | 2 |

**PART NUMBERS**

| | |
|---|---|
| SWB12126 | PAINTED LIGHT GREY |

**NOTES**

Optional Inner Panel Not Shown
See Hammond Website for More Information

**Français**

Pour tous les détails sur nos produits,
svp veuillez consulter notre site www.hammondmfg.com

Data subject to change without notice. Isometric drawing not to scale.
Les données sont sujettes à changement sans préavis.

HAMMOND MANUFACTURING®

www.hammondmfg.com

PART NO. **SWB12126**