X-STM32MP-NFC08

Data brief

STM32MP expansion board for NFC card reader

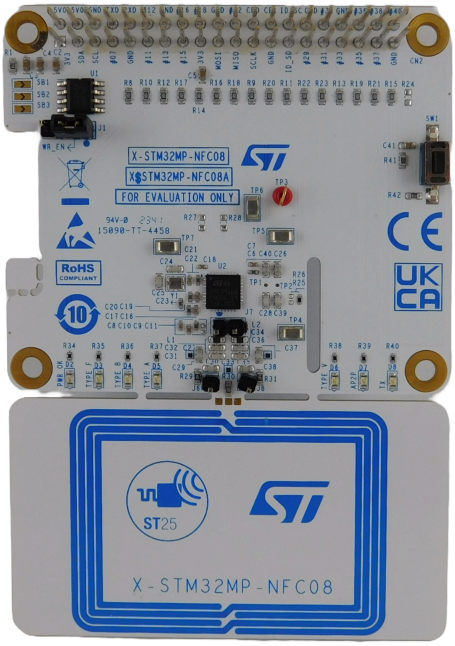

Features

- ST25R3916B NFC card reader IC
- 47 x 34 mm, four turns, 13.56 MHz inductive antenna etched on PCB and associated tuning circuit
- 6 general purpose LEDs and 1 Key for user interface
- EEPROM for automatic GPIO setup and driver setup
- Compatible with STM32MP157F-DK2, STM32MP135F-DK & Raspberry Pi's GPIO connector

Description

Then X-STM32MP-NFC08 is an NFC card reader evaluation board having an NFC card reader IC. It includes an antenna etched on the PCB and associated tuning circuit, general-purpose LEDs, and switches.

It embeds the ST25R3916B NFC card reader IC, which is a high-performance NFC universal device supporting NFC initiator, NFC target, NFC reader, and NFC card emulation modes.

The ST25R3916B device includes an advanced analog front end (AFE) and a highly integrated data framing system for: ISO 18092 passive and active initiator, ISO 18092 passive and active target, NFC-A/B (ISO 14443A/B) reader including higher bit rates, NFC-F (FeliCa™) reader, NFC-V (ISO 15693) reader up to 53 kbps, and NFC-A / NFC-F card emulation.

The X-STM32MP-NFC08 interfaces with the STM32MP microprocessor via 40-pin GPIO connector pins using SPI, I²C, and GPIO connections for various components. It is compatible with STM32MP157F-DK2, STM32MP135F-DK & Raspberry Pi's GPIO connector layout.

Product summary	
STM32MP expansion board for NFC card reader	X-STM32MP-NFC08
NFC reader for payment, consumer and industrial	ST25R3916B
Discovery kit with STM32MP157F MPU	STM32MP157F-DK2
Discovery kit with STM32MP135F MPU	STM32MP135F-DK
Applications	NFC / RFID

1 Block diagram

Figure 1. Block diagram

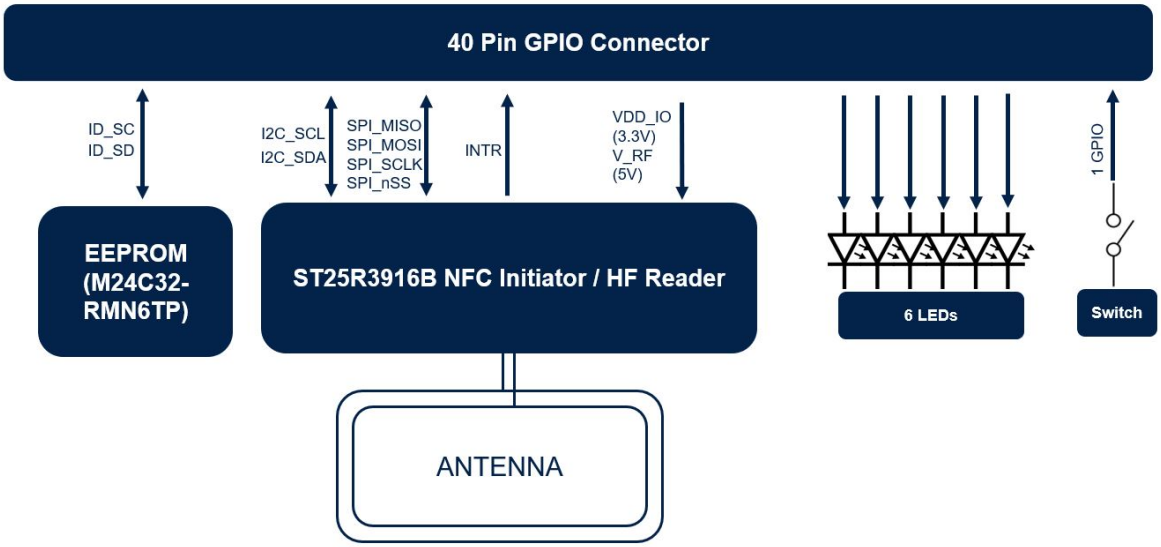

2 Schematic diagrams

Figure 2. X-STM32MP-NFC08 circuit schematics (1 of 6)

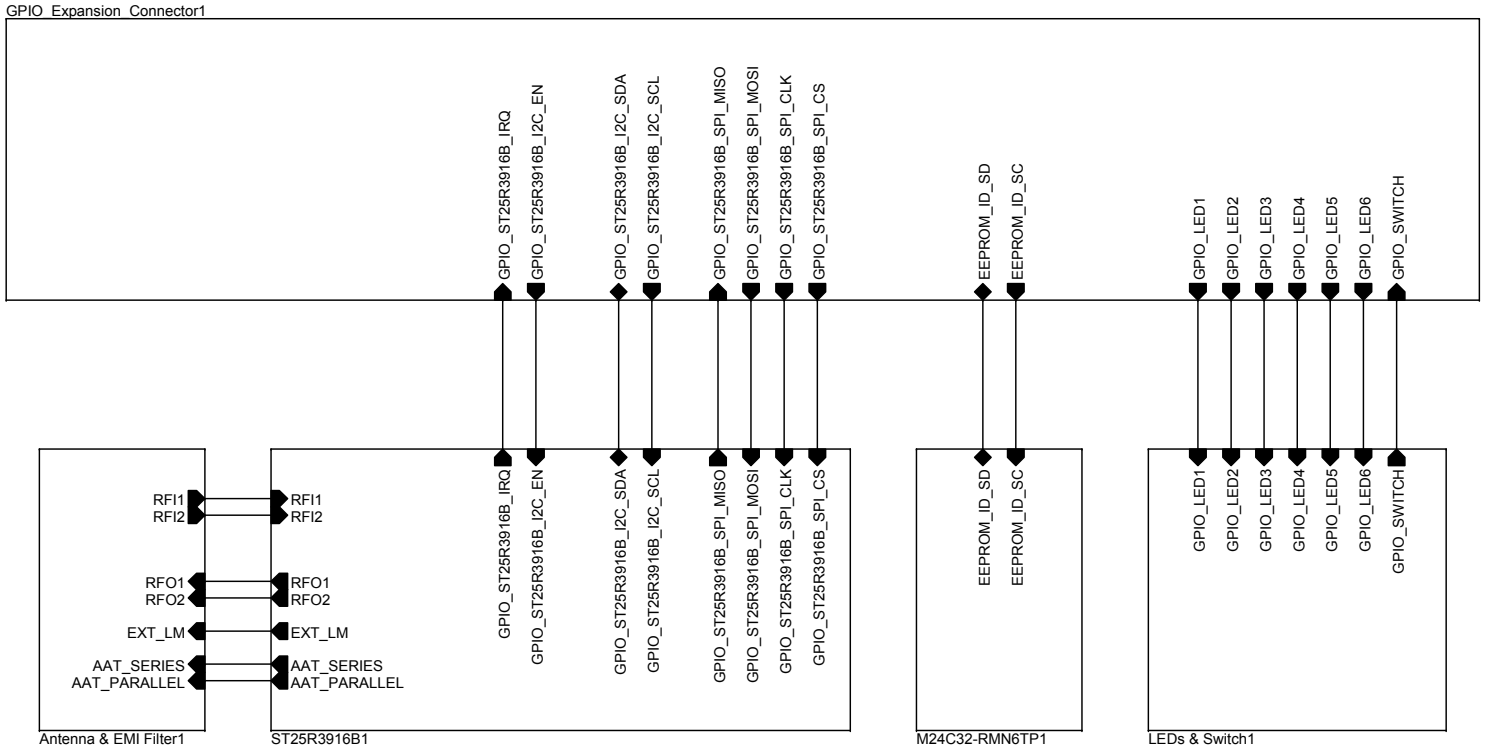

Figure 3. X-STM32MP-NFC08 circuit schematics (2 of 6)

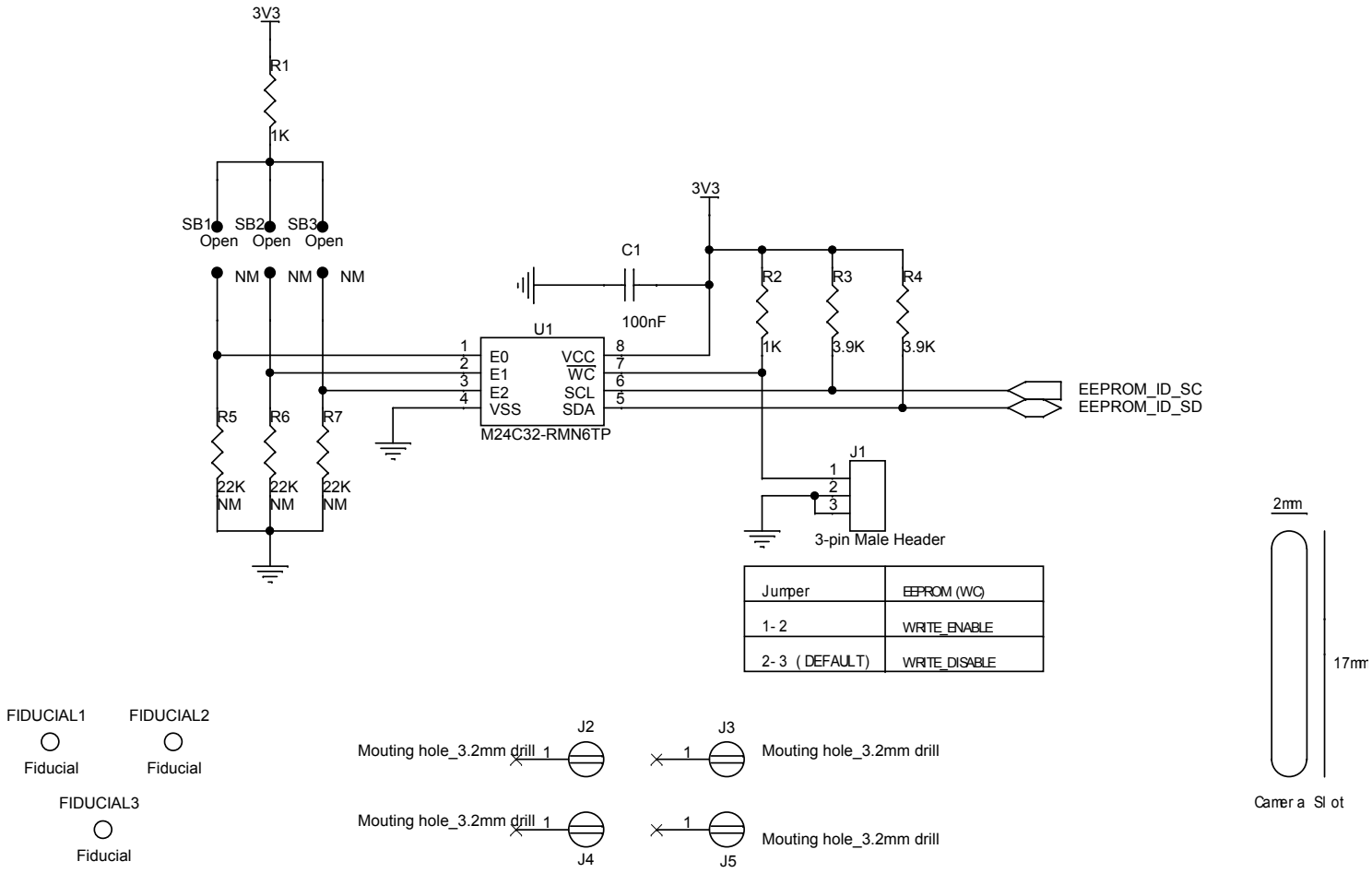

Figure 4. X-STM32MP-NFC08 circuit schematics (3 of 6)

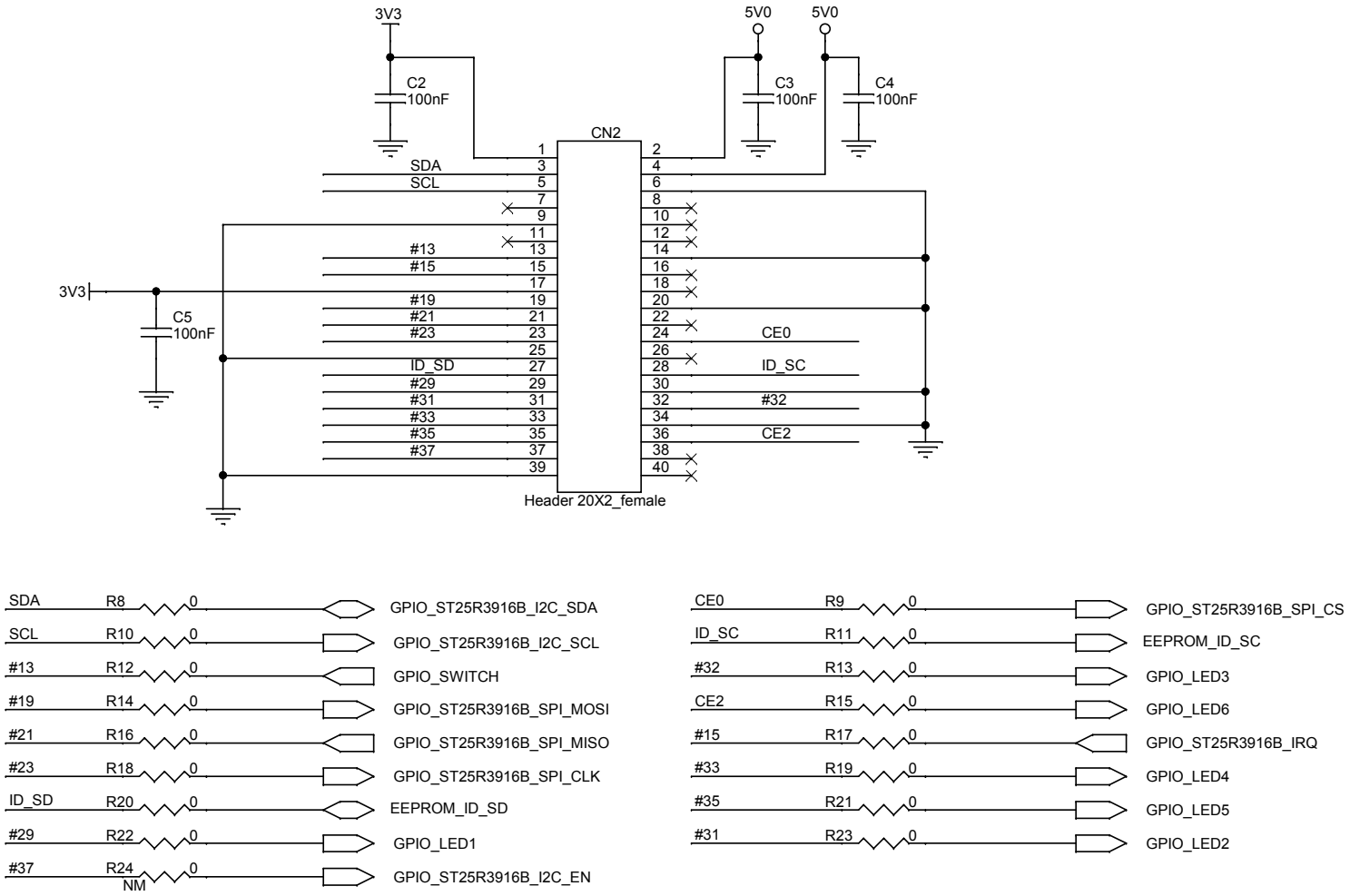

Figure 5. X-STM32MP-NFC08 circuit schematics (4 of 6)

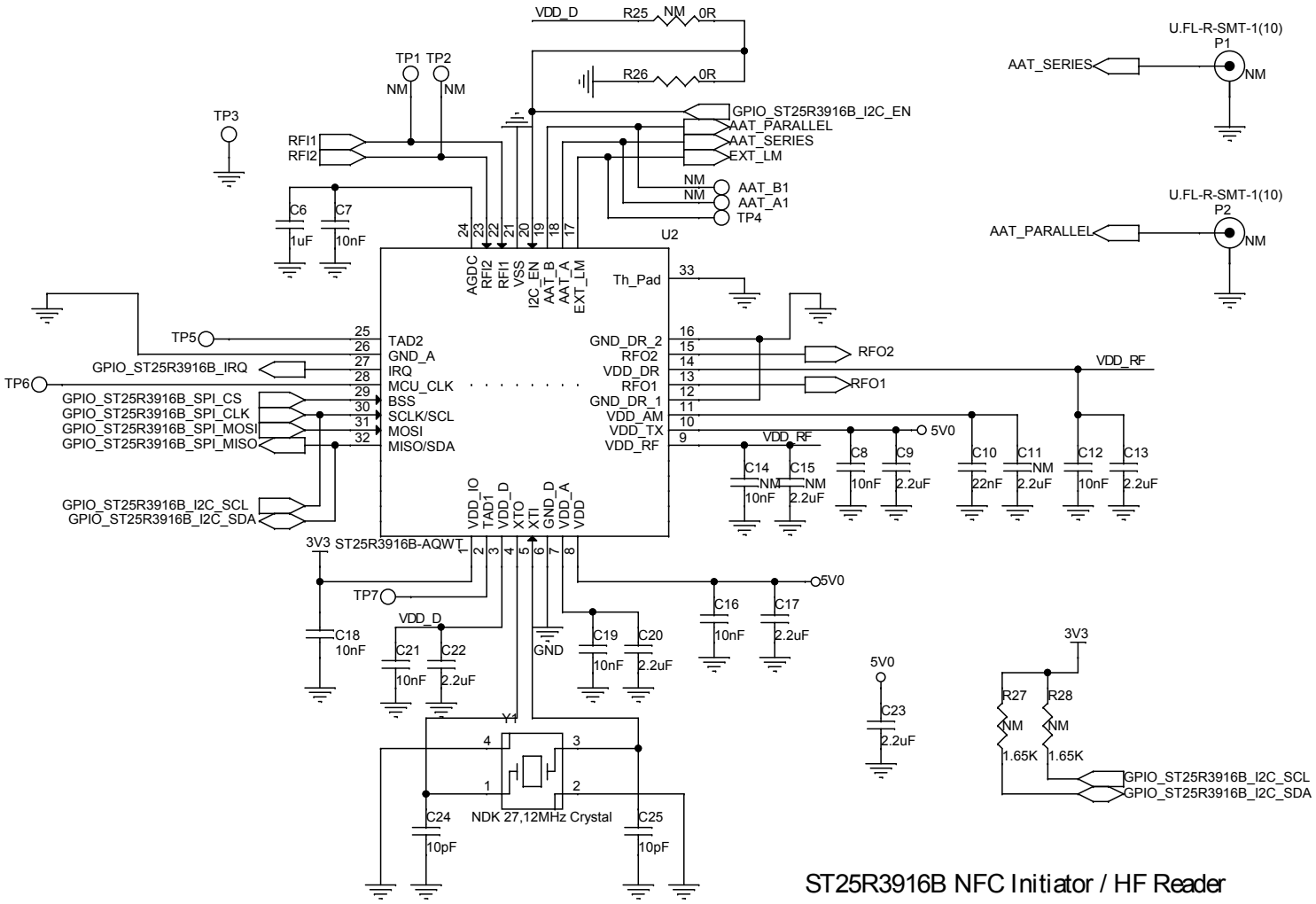

Figure 6. X-STM32MP-NFC08 circuit schematics (5 of 6)

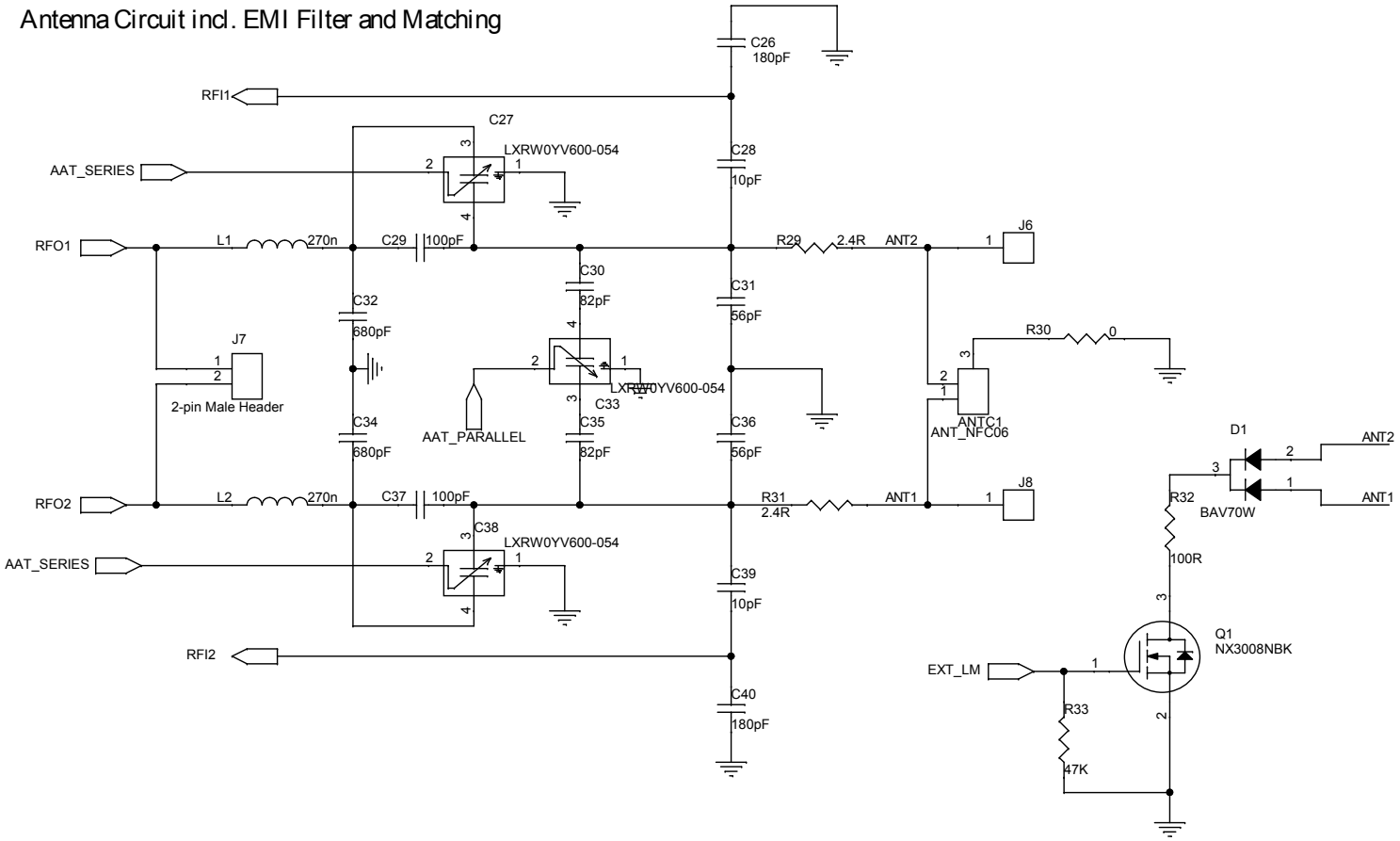

Figure 7. X-STM32MP-NFC08 circuit schematics (6 of 6)

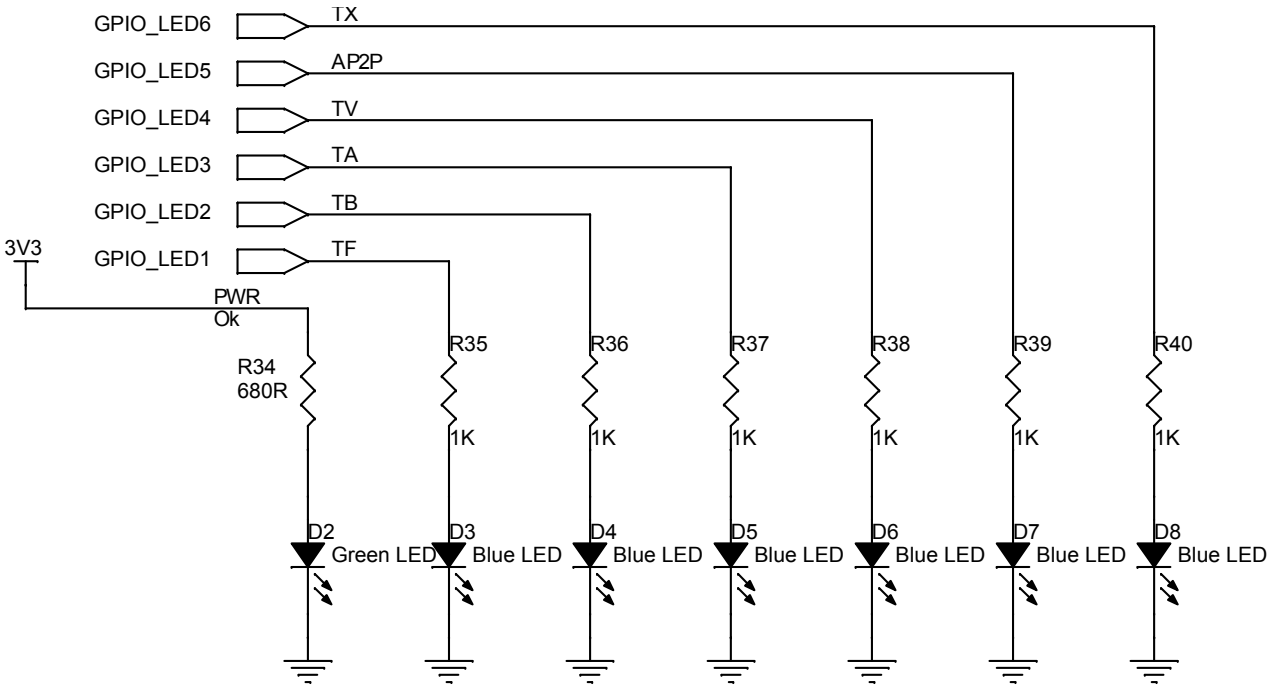

LEDs

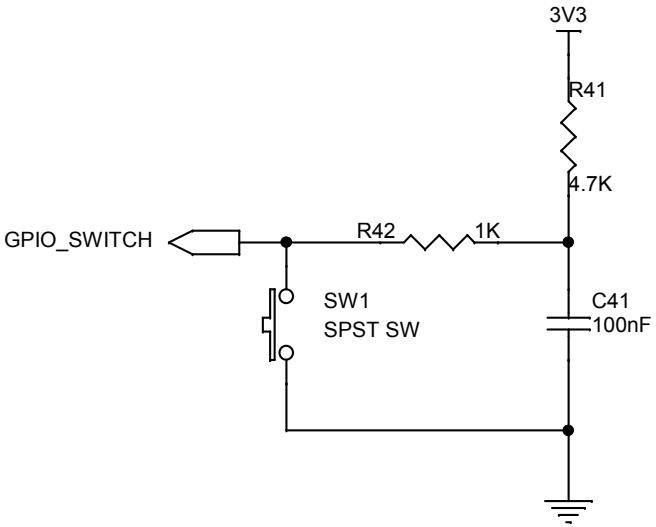

Switch

3 Board versions

Table 1. X-STM32MP-NFC08 versions

Finished good	Schematic diagrams	Bill of materials
X$STM32MP-NFC08A [1]	X$STM32MP-NFC08A schematic diagrams	X$STM32MP-NFC08A bill of materials

1. *This code identifies the X-STM32MP-NFC08 evaluation board first version.*

Revision history

Table 2. Document revision history

Date	Revision	Changes
21-Nov-2023	1	Initial release.

IMPORTANT NOTICE – READ CAREFULLY

STMicroelectronics NV and its subsidiaries (“ST”) reserve the right to make changes, corrections, enhancements, modifications, and improvements to ST products and/or to this document at any time without notice. Purchasers should obtain the latest relevant information on ST products before placing orders. ST products are sold pursuant to ST’s terms and conditions of sale in place at the time of order acknowledgment.

Purchasers are solely responsible for the choice, selection, and use of ST products and ST assumes no liability for application assistance or the design of purchasers’ products.

No license, express or implied, to any intellectual property right is granted by ST herein.

Resale of ST products with provisions different from the information set forth herein shall void any warranty granted by ST for such product.

ST and the ST logo are trademarks of ST. For additional information about ST trademarks, refer to www.st.com/trademarks. All other product or service names are the property of their respective owners.

Information in this document supersedes and replaces information previously supplied in any prior versions of this document.

© 2023 STMicroelectronics – All rights reserved