EVLPOE007V1

Data brief

PM8805 PoE powered device interface, evaluation board

Product status link
EVLPOE007V1

Product summary	
PM8805 evaluation board	EVLPOE007V1
IEEE Std.802.3bt PoE PD interface, with integrated dual active bridge	PM8805

Features

- 74x66 mm (3x2.6 inch) P.C.B. dimension optimized to allow probe connection, component replacing, additional wiring.
- Data & power input plus Data output RJ45 Ethernet connectors joined to a PoE signal path transformer, to meet Gbit and IEEE Std. 802.3 requirements.
- Chassis ground plane connection, with 1.6 mm (65 mils) creepage distance to the Ethernet wire connections.
- Adequate components available for EMC compliance and circuit setting in critical working conditions.
- Classification resistors and dip switch available, for PD's Class and Type selection.
- Eight LEDs and two push-button placements, for PD's status display and setting.
- Single connector presence, for Rear or Frontal auxiliary source implementation.
- Return path of the output voltage sectioned by a MOSFET, with control provided by the PG signal.
- Twenty two test points or turrets, for signals monitoring and board output connection.

Application

- PM8805 device learning and testing.
- PoE powered device developing.

Description

The EVLPOE007V1 is an evaluation tool dedicated to the use of the PM8805 device.

The evaluation board is designed to allow the testing of the PM8805 features and to verify the behavior of the component. See PM8805 datasheet for device description (see www.st.com).

The board can be used as a functional block in a complete PD design, having all possible features available to implement a demanding application circuit.

This data brief enounces the principal features only, all the characteristics and functionality of the evaluation board, are detailed in the application note (see www.st.com).

1 Electrical specifications

The following table reports the most important electrical specifications of the evaluation board.

Table 1. EVLPOE007V1 electrical specifications.

Parameter	Description	Min.	Max.	Unit
Vin	Input voltage at J1 connector	35	57	V
Iin	Input current at J1 connector for each Ethernet Pair		1	A
Vout	Output voltage at TP19 and TP21 turrets	34	57	V
Iout	Output current at TP19 and TP21 turrets		2	A
Pout	Output power at TP19 and TP21 turrets		100	W
η%	Overall efficiency at Iout=2 A	97		%
VFront	Voltage at J3 connector as Frontal auxiliary input	35	57	V
IFront	Current at J3 connector as Frontal auxiliary input		2	A
VRear	Voltage at J3 connector as Rear auxiliary input	35	57	V
IRear	Current at J3 connector as Rear auxiliary input		2	A
Tamb	Operating ambient temperature	0	50	°C

2 Electrical schematic

Figure 1. EVLPOE007V1 - Electrical schematic - page 1

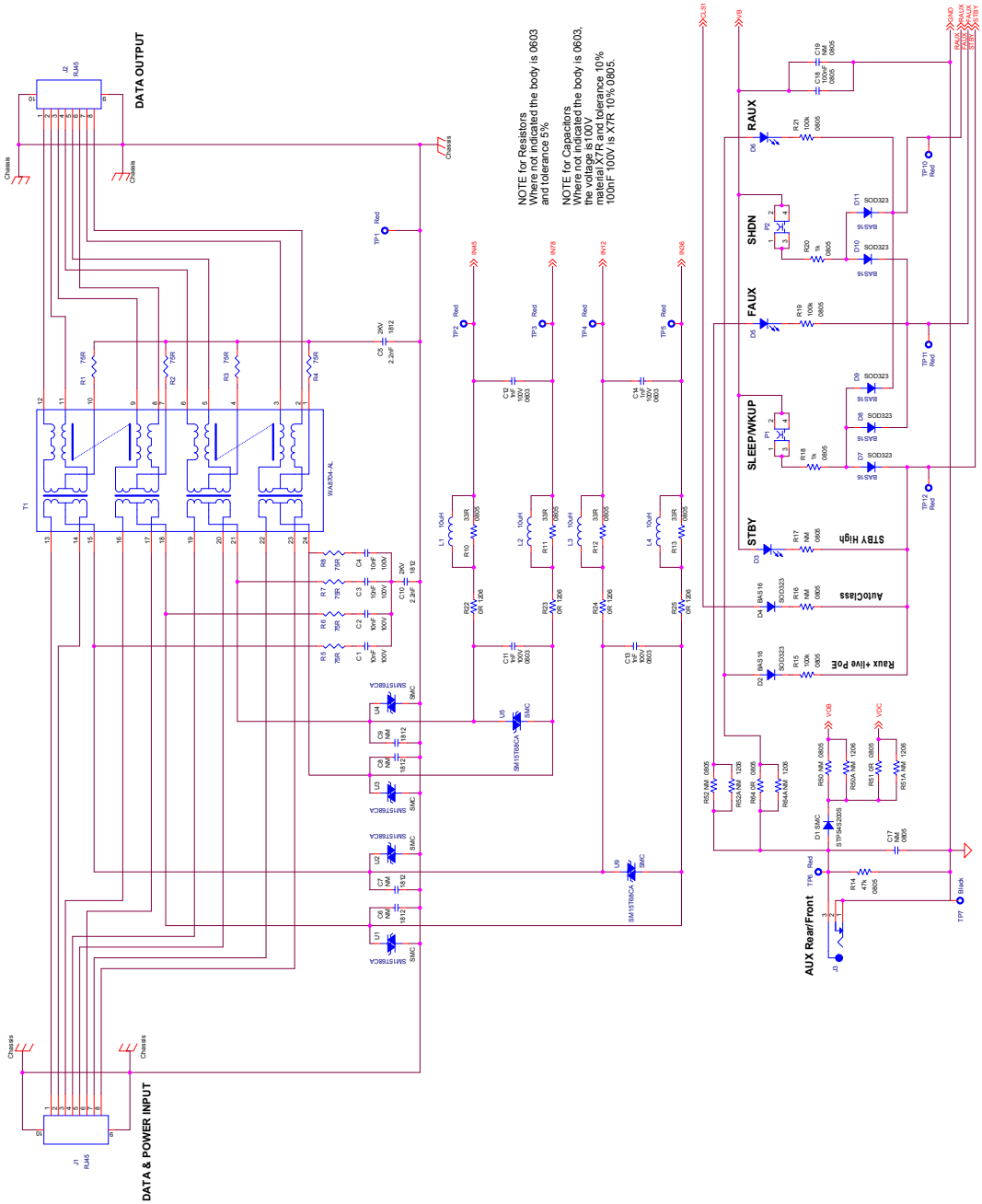

Figure 2. EVLPOE007V1 - Electrical schematic – page 2

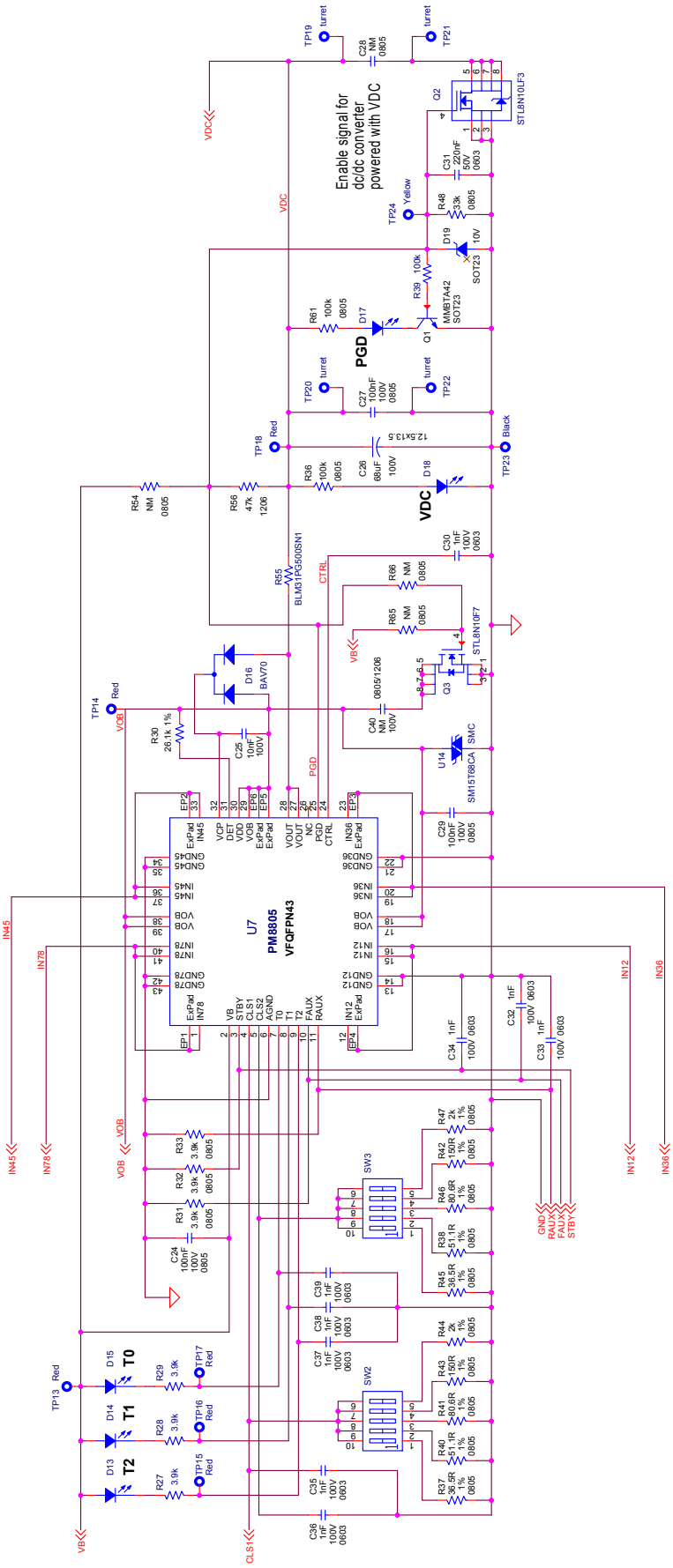

3 Components layout

Figure 3. **EVLPOE007V1 – Components layout – top side**

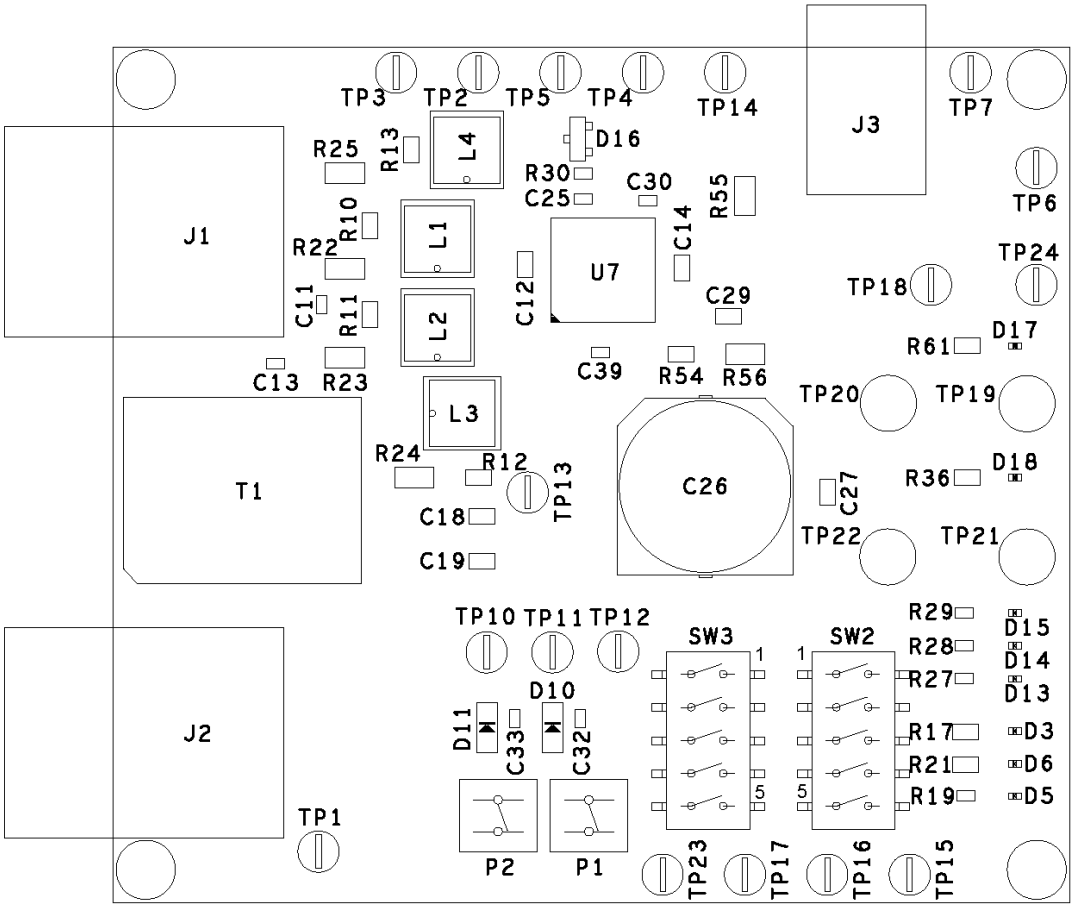

Figure 4. **EVLPOE007V1 – Components layout – bottom side**

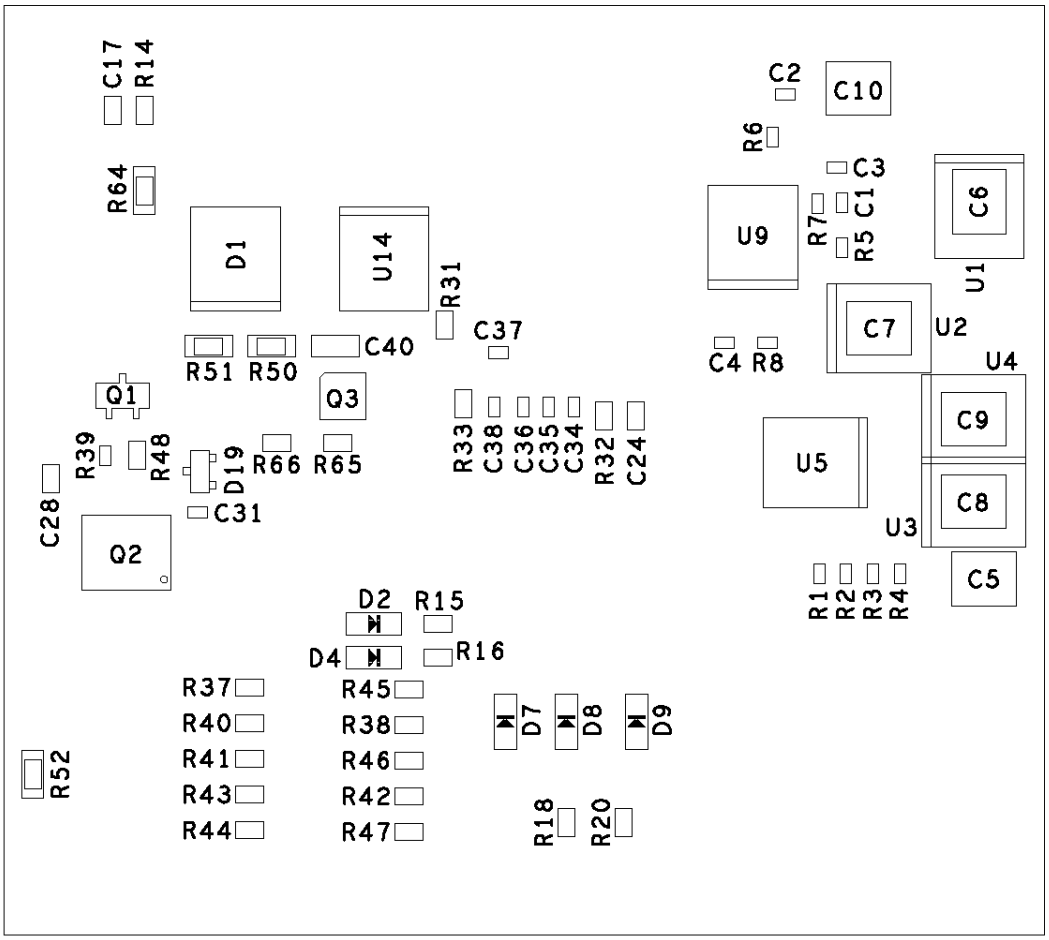

4 Bill of materials

Table 2. **EVLPOE007V1 - Bill of materials.**

Q.ty	Reference designator	Value	Description	Package	Manufacturer code	Manufacturer
5	C1, C2, C3, C4, C25	10nF 100V X7R	SMT capacitor	Size 0603	-	Several
2	C5, C10	2.2nF 2kV X7R	SMT capacitor	Size 1812	C4532X7R3D222K130KA or equivalent	TDK
4	C6, C7, C8, C9	NM	SMT capacitor	Size 1812	-	-
2	C12, C14	1nF 100V COG (NP0)	SMT capacitor	Size 0805	-	Several
3	C17, C19, C40	NM	SMT capacitor	Size 0805	-	-
5	C18, C24, C27, C28, C29	100nF 100V X7R	SMT capacitor	Size 0805	-	Several
1	C26	68uF 100V	SMT capacitor	Diam 12.5X13	EEEFK2A680AQ or equivalent	Panasonic
11	C11, C13, C30, C32, C33, C34, C35, C36, C37, C38, C39	1nF 100V X7R	SMT capacitor	Size 0603	-	Several
1	C31	220nF 16V X7R	SMT capacitor	Size 0603	-	Several
1	D1	STPS4S200S	4A - 200V power Schottky rectifier	SMC	STPS4S200S	STMicroelectronics
7	D2, D4, D7, D8, D9, D10, D11	BAS16	Silicon switching diode	SOD323	BAS16-03W or equivalent	Infineon
1	D3	STBY	1.0X0.5mm SMD chip LED	Size 0402	KPHHS-1005MGCK or equivalent	Kingbright
1	D5	FAUX	1.0X0.5mm SMD chip LED	Size 0402	KPHHS-1005MGCK or equivalent	Kingbright
1	D6	RAUX	1.0X0.5mm SMDchip LED	Size 0402	KPHHS-1005MGCK or equivalent	Kingbright
1	D13	T2	1.0X0.5mm SMD chip LED	Size 0402	KPHHS-1005MGCK or equivalent	Kingbright
1	D14	T1	1.0X0.5mm SMD chip LED	Size 0402	KPHHS-1005MGCK or equivalent	Kingbright
1	D15	T0	1.0X0.5mm SMD chip LED	Size 0402	KPHHS-1005MGCK or equivalent	Kingbright
1	D16	BAV70	Dual switching diode common cathode	SOT23	BAV70LT1G / T3G or equivalent	ON Semiconductor
1	D17	PGD	1.0X0.5mm SMD chip LED	Size 0402	KPHHS-1005MGCK or equivalent	Kingbright
1	D18	VDC	1.0X0.5mm SMD chip LED	Size 0402	KPHHS-1005MGCK or equivalent	Kingbright

Q.ty	Reference designator	Value	Description	Package	Manufacturer code	Manufacturer
1	D19	BZX84C10	350mW surface mount Zener diode	SOT23	BZX84C10 or equivalent	Diodes Incorporated
1	J1	Data & power input	Eight contact, eight position shielded jack		SS-7188S-A-NF or equivalent	Stewart Connector
1	J2	Data output	Eight contact, eight position shielded jack		SS-7188S-A-NF or equivalent	Stewart Connector
1	J3	AUX Rear/ Front	Receptacle for 6.3mm power jack, 2mm pin		RAPC722 or equivalent	Switchcraft
4	L1, L2, L3, L4	10uH	SMT power inductors – SD54 series	SD54	SD54-103ML_x or equivalent	Coilcraft
1	P1	Sleep/WKUP	7914 4 mm SMD & through-hole sealed key switch	7914J	7914J-1-000E or equivalent	Bourns
1	P2	SHDN	7914 4 mm SMD & through-hole sealed key switch	7914J	7914J-1-000E or equivalent	Bourns
1	Q1	MMBTA42	Small signal NPN transistor	SOT23	MMBTA42 or equivalent	Several
1	Q2	STL8N10LF3	N-channel 100V, 25mΩ, 7.8A, MOSFET	PowerFLAT 5x6	STL8N10LF3	STMicroelectronics
1	Q3	STL8N10F7	N-channel 100V, 17mΩ, 8A, MOSFET	PowerFLAT 3.3x3.3	STL8N10F7	STMicroelectronics
8	R1, R2, R3, R4, R5, R6, R7, R8	75R	SMT resistor	Size 0603	-	Several
4	R10, R11, R12, R13	33R	SMT resistor	Size 0805	-	Several
1	R14	47K	SMT resistor	Size 0805	-	Several
4	R15, R21, R36, R61	100k	SMT resistor	Size 0805	-	Several
2	R16, R17	NM	SMT resistor	Size 0805	-	-
2	R18, R20	1K	SMT resistor	Size 0805	-	Several
2	R19, R39	100k	SMT resistor	Size 0603	-	Several
3	R27, R28, R29	3.9K	SMT resistor	Size 0603	-	Several
1	R30	26.1K 1%	SMT resistor	Size 0603	-	Several
3	R31, R32, R33	3.9k	SMT resistor	Size 0805	-	Several
2	R37, R45	35.6R 1%	SMT resistor	Size 0805	-	Several
2	R38, R40	51.1R 1%	SMT resistor	Size 0805	-	Several
2	R41, R46	80.6R 1%	SMT resistor	Size 0805	-	Several
2	R42, R43	150R 1%	SMT resistor	Size 0805	-	Several

Q.ty	Reference designator	Value	Description	Package	Manufacturer code	Manufacturer
2	R44, R47	2K 1%	SMT resistor	Size 0805	-	Several
1	R48	33K	SMT resistor	Size 0805	-	Several
5	R50, R52, R54, R65, R66	NM	SMT resistor	Size 0805	-	-
2	R51, R64	0R	SMT resistor	Size 0805	-	Several
	R55	50 Ohm	Bead impeder	Size 1206	BLM31PG500SN1	Murata
4	R22, R23, R24, R25	0R	SMT resistor	Size 1206	-	Several
1	R56	47K	SMT resistor	Size 1206	-	Several
2	SW2, SW3	A6S-5104-H	Slide DIP switch		A6S-5104-H or equivalent	Omron
15	TP1, TP2, TP3, TP4, TP5, TP6, TP10, TP11, TP12, TP13, TP14, TP15, TP16, TP17, TP18	Red	Red bead terminal, diam. 1.32mm	Diam. 2.9 Hole 1.6mm	20-313141 or equivalent	Vero Technologies
2	TP7, TP23	Black	Black bead terminal, diam. 1.32mm	Diam. 2.9 Hole 1.6mm	20-2136 or equivalent	Vero Technologies
4	TP19, TP20, TP21, TP22	Turret	Solder terminal turrets	2501	2501-2-00-80-00-00-07-0 or equivalent	Mill-Max
1	TP24	Yellow	Yellow bead terminal, diam. 1.32mm	Diam. 2.9 Hole 1.6mm	20-313141 or equivalent	Vero Technologies
1	T1	WA8704-AL	POE signal path transformer		WA8704-ALD or equivalent	Coilcraft
7	U1, U2, U3, U4, U5, U9, U14	SM15T68CA	1500 W TVS diode	SMC	SM15T68CA	STMicroelectronics
1	U7	PM8805	IEEE 802.3bt PoE-PD interface	VFQFPN 8X8X1.0 43L	PM8805TR	STMicroelectronics
4	-	-	Plastic support for P.C.B.	-	PST-6-01 or equivalent	Essentra Components
1	-	-	FR4 four layers P.C.B.	66x73.81 mm	-	-

5 Waste and recycling

The Evaluation board is not to be disposed of as urban waste. At the end of its life cycle, differentiated waste collection must be followed. Consult the local authorities for more information on the proper disposal channels and recycling centers. It is mandatory to collect separately the Evaluation board and make sure it is delivered to the appropriate waste management and recycling centers. As of 15 August 2018, in all the countries belonging to the European Union, the Evaluation board is subject to the requirements of WEEE Directive 2012/19/EU, and therefore it is forbidden to dispose of the Evaluation board as undifferentiated waste or with other domestic waste. Incorrect disposal of the Evaluation board may cause damage to the environment and may incur fines based on specific countries' rules, regulations, and laws.

Revision history

Table 3. Document revision history

Date	Version	Changes
01-Dec-2022	1	Initial release.

Contents

1 Electrical specifications 2
2 Electrical schematic 3
3 Components layout 5
4 Bill of materials 7
5 Waste and recycling 10
Revision history 11
List of tables 13
List of figures 14

List of tables

Table 1. EVLPOE007V1 electrical specifications. 2
Table 2. EVLPOE007V1 - Bill of materials. 7
Table 3. Document revision history 11

List of figures

Figure 1. EVLPOE007V1 - Electrical schematic - page 1 3
Figure 2. EVLPOE007V1 - Electrical schematic – page 2 4
Figure 3. EVLPOE007V1 – Components layout – top side 5
Figure 4. EVLPOE007V1 – Components layout – bottom side 6

IMPORTANT NOTICE – READ CAREFULLY

STMicroelectronics NV and its subsidiaries (“ST”) reserve the right to make changes, corrections, enhancements, modifications, and improvements to ST products and/or to this document at any time without notice. Purchasers should obtain the latest relevant information on ST products before placing orders. ST products are sold pursuant to ST’s terms and conditions of sale in place at the time of order acknowledgment.

Purchasers are solely responsible for the choice, selection, and use of ST products and ST assumes no liability for application assistance or the design of purchasers’ products.

No license, express or implied, to any intellectual property right is granted by ST herein.

Resale of ST products with provisions different from the information set forth herein shall void any warranty granted by ST for such product.

ST and the ST logo are trademarks of ST. For additional information about ST trademarks, refer to www.st.com/trademarks. All other product or service names are the property of their respective owners.

Information in this document supersedes and replaces information previously supplied in any prior versions of this document.

© 2022 STMicroelectronics – All rights reserved