STEVAL-IFP042V1

Data brief

Industrial digital output expansion board based on ISO808A in TFQFPN32 package

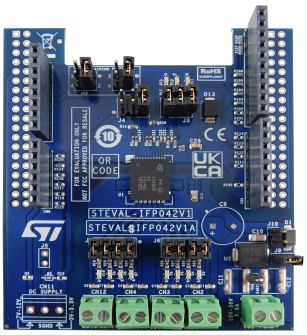

Product summary	
Industrial digital output expansion board based on ISO808A in TFQFPN32 package	STEVAL-IFP042V1
Software expansion for STM32Cube driving industrial digital output based on IPS	X-CUBE-IPS
Galvanic isolated octal high-side power solid state relay with SPI interface for high inductive loads	ISO808AQTR
Applications	Programmable Logic Controllers

Features

- Based on the ISO808A octal high-side switch, which features:
  - Operating range 9.2 to 36 V
  - Low power dissipation ($R_{ON(MAX)}$ = 260 mΩ)
  - Process side operating current: up to 0.7 A per channel
  - Embedded 2.5k V_{RMS} galvanic isolation
  - PGOOD (V_{CC} voltage level alarm signalization)
  - 20 MHz SPI with daisy chaining
  - Fast decay for inductive loads
  - Undervoltage lock-out
  - Overload and overtemperature protections
  - Loss of ground protection
  - TFQFPN32 package
- Application board process side operating range: 10 (J10 open) to 33 V (J9 closed)
- Extended operating range of process side from 9.2 (J10 closed) up to 36 V (J9 open)
- Application board logic side operating voltage 3.3 to 5 V
- Green LEDs for outputs on/off status (J6 and J7 close 1-2, 3-4, 5-6, 7-8)
- Red LED for common overheating and communication error diagnostic (J3 close 1-2)
- Red LED for PGOOD signalization (J3 close 3-4)
- Yellow LED for output enable status signalization (J3 close 5-6)
- Process and logic supply rails reverse polarity protections
- Compatible with STM32 Nucleo development boards
- Equipped with Arduino® UNO R3 connectors
- RoHS and China RoHS compliant
- CE certified

Description

The STEVAL-IFP042V1 is an industrial digital output expansion board based on ISO808A and compatible with STM32 Nucleo.

It provides a powerful and flexible environment for the evaluation of the driving and diagnostic capabilities of the ISO808A octal high-side smart power solid state relay, with embedded galvanic isolation and 20MHz SPI control interface, in a digital output module connected to 0.7 A industrial loads.

The STEVAL-IFP042V1 directly interfaces with the microcontroller on the STM32 Nucleo driven by GPIO pins and Arduino® R3 connectors, ensuring connectivity with either a NUCLEO-F401RE or a NUCLEO-G431RB development board.

The galvanic isolation between the microcontroller and the process stage is guaranteed by the ISO808A.

It is also possible to evaluate a 16 channel digital output system enabling the daisy chaining feature on two STEVAL-IFP042V1 stacked expansion boards.

1 Schematic diagrams

Figure 1. STEVAL-IFP042V1 circuit schematic (1 of 2)

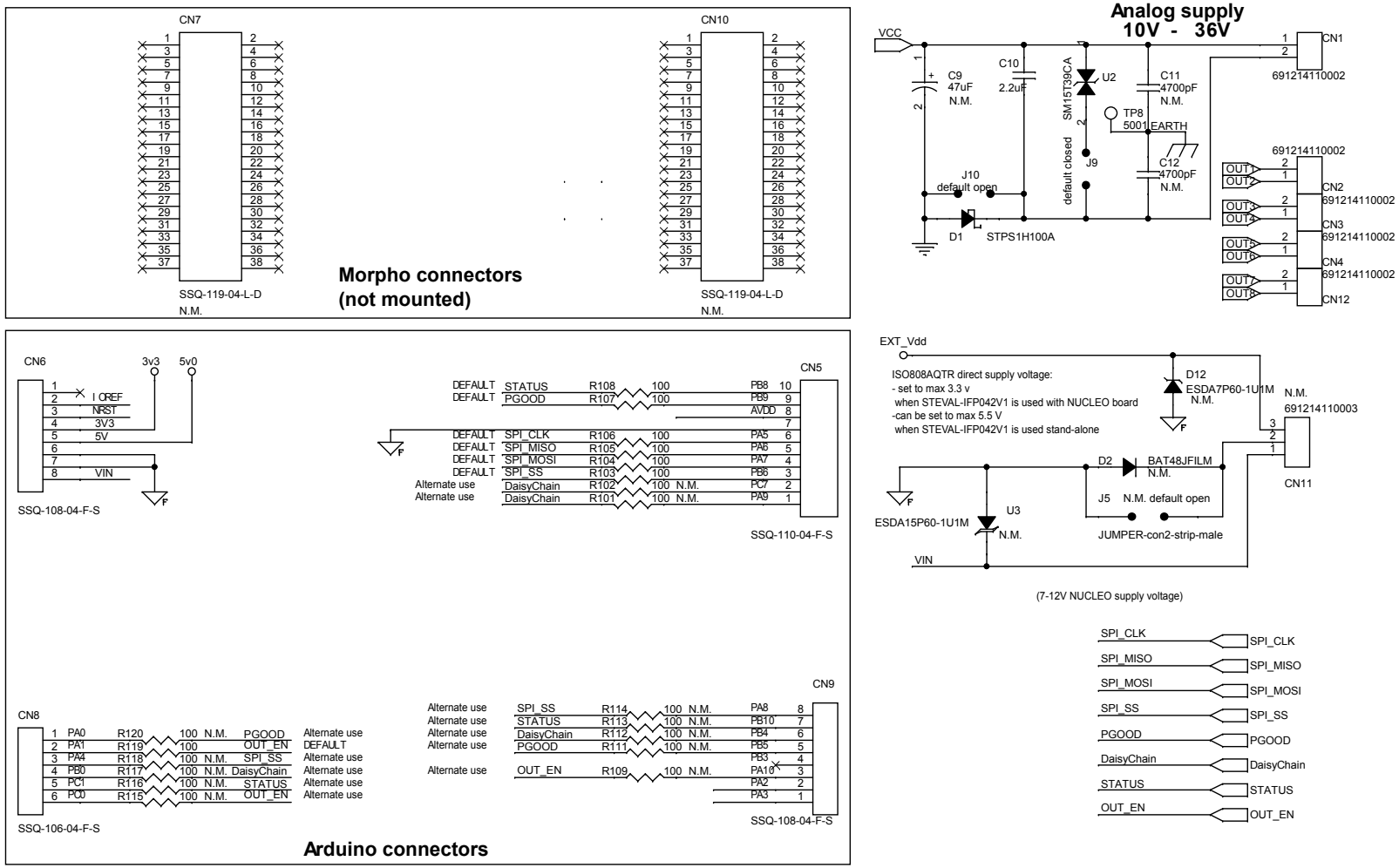

Figure 2. STEVAL-IFP042V1 circuit schematic (2 of 2)

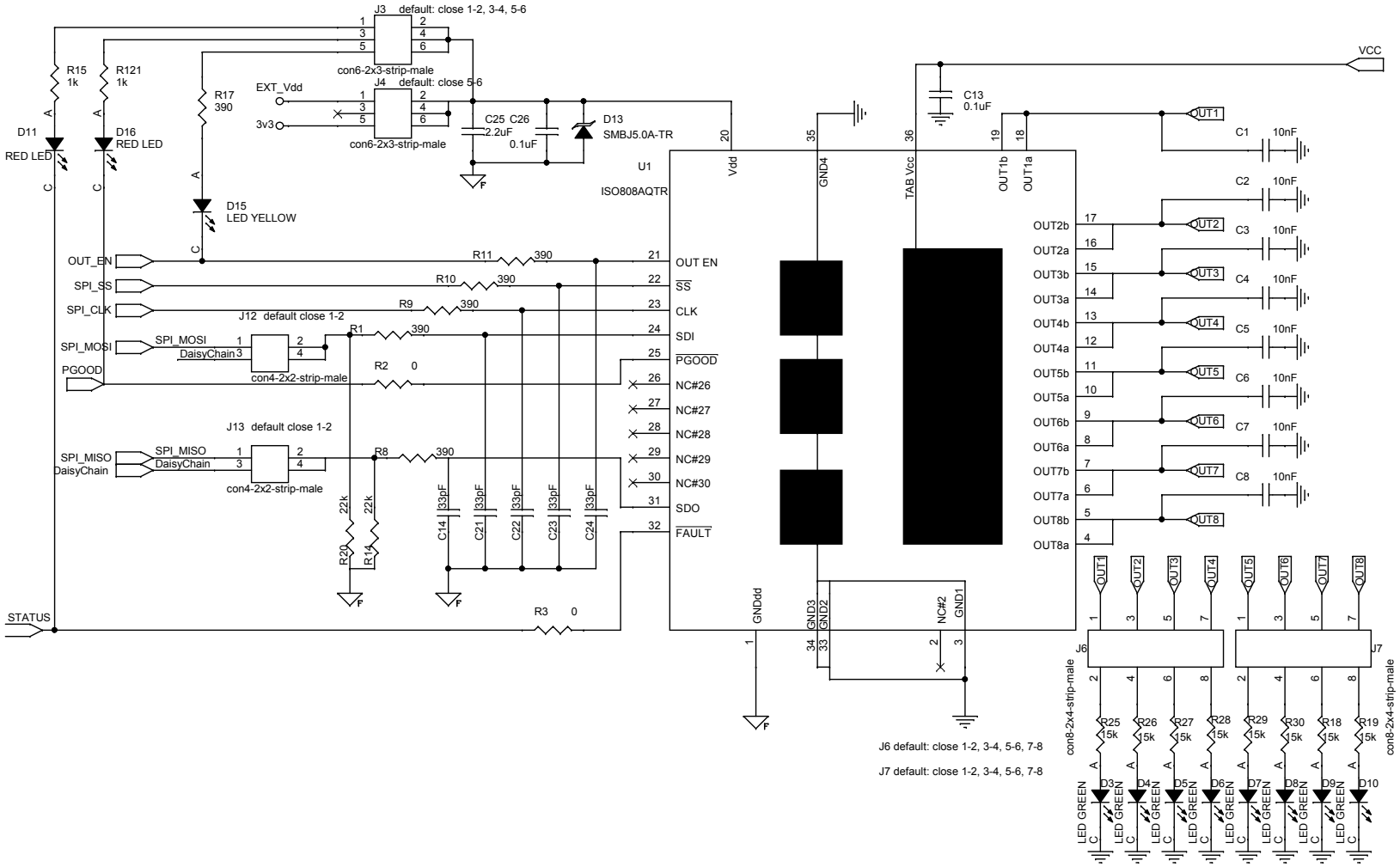

2 Board versions

Table 1. STEVAL-IFP042V1 versions

Finished good	Schematic diagrams	Bill of materials
STEVAL$IFP042V1A [1]	STEVAL$IFP042V1A schematic diagrams	STEVAL$IFP042V1A bill of materials

1. *This code identifies the STEVAL-IFP042V1 evaluation board first version.*

Revision history

Table 2. Document revision history

Date	Revision	Changes
11-Sep-2023	1	Initial release.

IMPORTANT NOTICE – READ CAREFULLY

STMicroelectronics NV and its subsidiaries (“ST”) reserve the right to make changes, corrections, enhancements, modifications, and improvements to ST products and/or to this document at any time without notice. Purchasers should obtain the latest relevant information on ST products before placing orders. ST products are sold pursuant to ST’s terms and conditions of sale in place at the time of order acknowledgment.

Purchasers are solely responsible for the choice, selection, and use of ST products and ST assumes no liability for application assistance or the design of purchasers’ products.

No license, express or implied, to any intellectual property right is granted by ST herein.

Resale of ST products with provisions different from the information set forth herein shall void any warranty granted by ST for such product.

ST and the ST logo are trademarks of ST. For additional information about ST trademarks, refer to www.st.com/trademarks. All other product or service names are the property of their respective owners.

Information in this document supersedes and replaces information previously supplied in any prior versions of this document.

© 2023 STMicroelectronics – All rights reserved