Revision History		
Rev	Description	Date
1	Release	9/3/2021
2	Update Construction	10/7/2021
3	Update Distortion, Modernize Formatting	1/28/2022
4	Add Pupil and Ref Dims, ImCirc update	10/11/2023
5	Update Title Block	8/26/2024

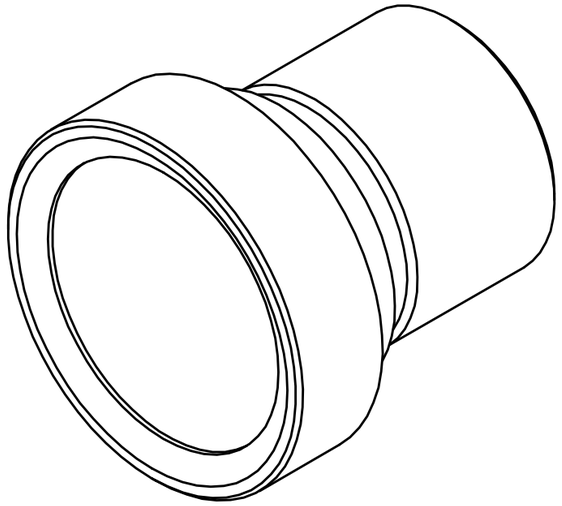

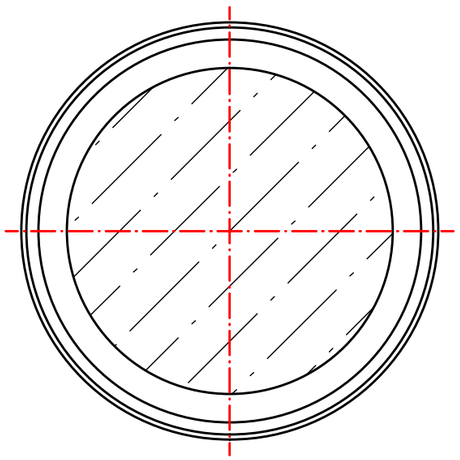

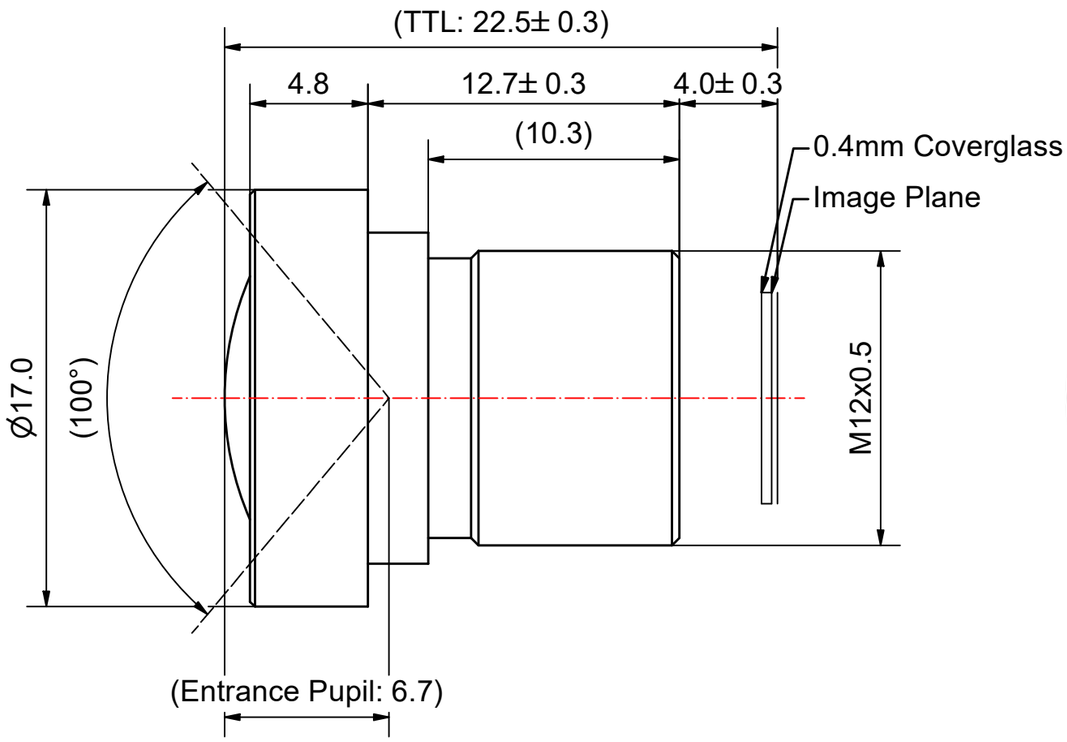

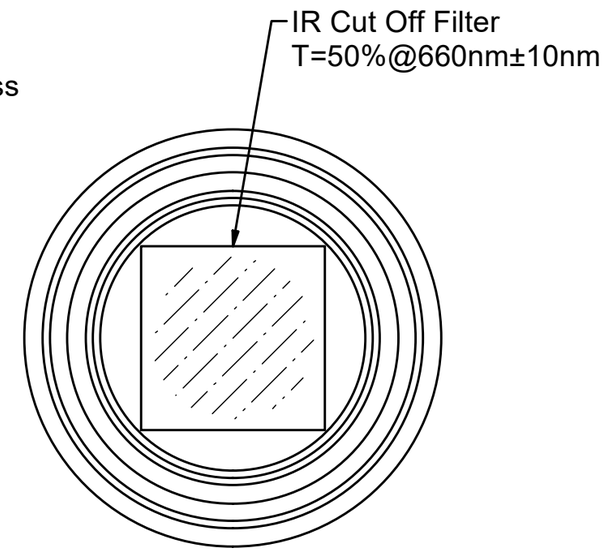

Notes:
1.) Dimensions in parentheses are for reference only.
2.) Rated IP67.

	Name	Date
Drawn	Jason Holtkamp	8/26/2024
Checked		
QA Appr.		

Effective Focal Length (EFL) 3.25mm	Format Type 1/1.9"	Nominal Resolution 8-10MP, 1.85µm
F/# 2.7	Design Image Circle 7.8mm	Max Image Circle 9.0mm
Chief Ray Angle (CRA) 14° @ 7.8mm ImCirc	Operating Temperature /	Storage Temperature /
Optical Construction 4G2P	Barrel Material AL6061	Weight 5.7g

Image Circle	FOV	Distortion Rectilin.	Distortion F-θ	Distortion TV (4:3)
3.5mm	56°	0%	+9%	0%
6.5mm	90°	0%	+27%	0.05%
8.0mm	102°	0.1%	+34%	0.07%

UNLESS OTHERWISE SPECIFIED DIMENSIONS ARE IN MILLIMETERS
TOLERANCES:
MECHANICAL:
X ± 1
X.X ± 0.1
X.XX ± 0.01
OPTICAL:
±5% OF NOMINAL VALUE
THIRD ANGLE

TITLE: 3.2mm M12 Lens
DATE: 8/26/2024

Commonlands LLC
San Diego, CA
+1 (858) 333-7325, engineering@commonlands.com

PART NUMBER: CIL034-F2.7-M12A660
SHEET 1 OF 1
DO NOT SCALE
REV: 5