Revision History		
Rev	Description	Date
1	Release	9/24/2021
2	Update Formatting	11/2/2022

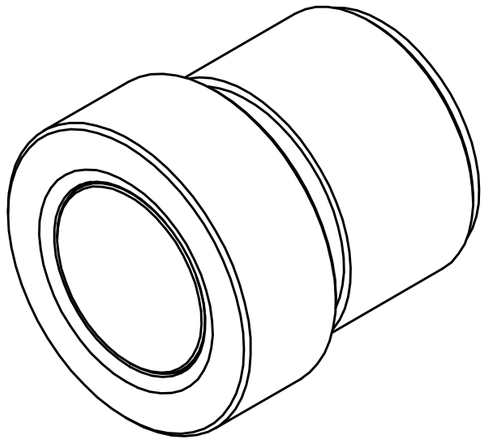

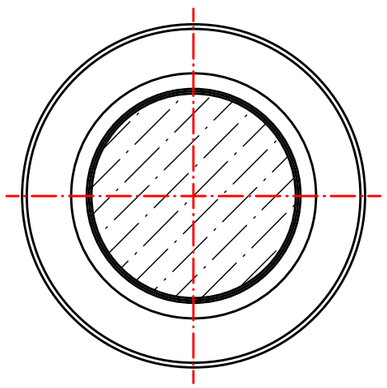

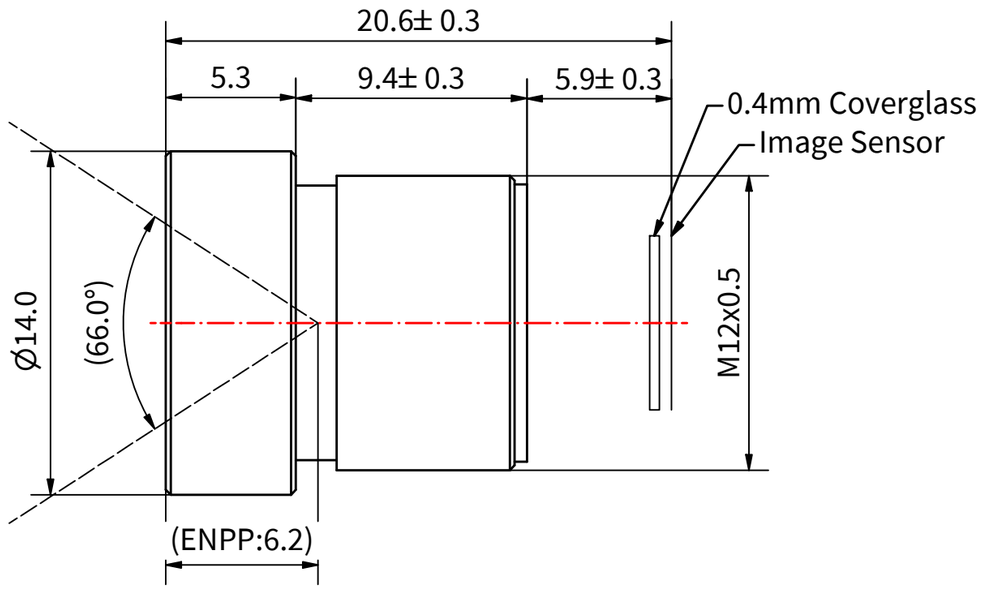

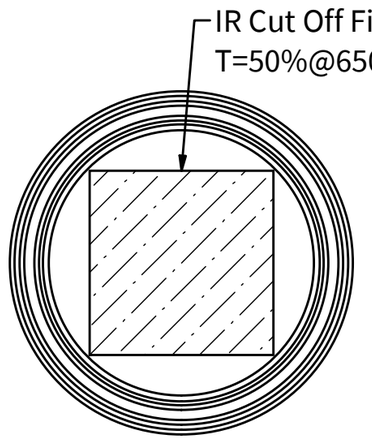

Notes:
1.) IP69K
2.) Dimensions in parenthesis are reference only.

	Name	Date
Drawn		
Checked		
QA Appr.		

Effective Focal Length (EFL)	F/#	Image Circle	Field of View	Distortion Rectilin.	Distortion F-θ	Distortion TV (4:3)
6.0mm	1.9	3.5mm	33°	-2.0%	+0.7%	-1.3%
Image Circle (IC), Format Type	Nominal Resolution	6.0mm	56°	-6.0%	+2.1%	-3.5%
7.6mm+ 1/2.5"+	3MP-4MP	7.0mm	66°	-7.7%	+3.0%	-4.8%
Chief Ray Angle at IC	Weight	Third Angle	Scale Not To Scale	Unless otherwise specified Standard tolerances are:		
12°@7.0mm IC	4.8g		All Dimensions in mm	Optical: X.X ± 5%, X.XX ± 5% Mechanical: X.X ± 0.1mm		
Optical Construction	Barrel Material	6.0mm F/1.9 M12 Lens				Date
6G+IRCF	AL6061					11/2/2022
Commonlands LLC San Diego, CA +1 (858) 333-7325, engineering@commonlands.com		CIL061-F1.9-M12B650				Rev. 2